Operation Manual

Preface

The HS930 series AC drive is a general-purpose high-performance current vector control AC drive. It is an upgrade product based on HS900 and can implement the control of asynchronous motor and permanent magnet synchronous motor (PMSM). It increases the user programmable function, background monitoring software and communication bus function, and supports multi-kind PG cards. It is used to drive various automation production equipment involving textile, paper-making, wiredrawing, machine tool, packing, food, fan and pump.

This manual describes the correct use of the HS930 series AC drive, including selection, parameter setting, commissioning, maintenance & inspection. Read and understand the manual before use and forward the manual to the end user.

Notes

- The drawings in the manual are sometimes shown without covers or protective guards. Remember to install the covers or protective guards as specified first, and then perform operations in accordance with the instructions.
- The drawings in the manual are shown for description only and may not match the product you purchased.
- The instructions are subject to change, without notice, due to product upgrade, specification modification as well as efforts to increase the accuracy and convenience of the manual.
- Contact us if you have problems during the use.

Andy Sun -International Sales Department Manager

Phone: 86+15861598173 (WhatsApp/Wechat/Telegram ID)
Office Tel: 86+051068220580
Email: sales@vfdspread.com
Website: www.hars-vfd.com
TikTok: @bestvfd

Introduction

Compared with 900 the HS930 series AC drive incorporates the following improvements:

1) Multiple voltage classes

It provides coverage of single-phase 220 V, three-phase 220 V, three-phase 380 V, three-phase 480 V, three-phase 690 V and three-phase 1,140 V.

2) Control of asynchronous motor and PMSM

It supports vector control of three-phase AC asynchronous motor and three-phase AC PMSM.

3) Diversified control modes

It supports three control modes, namely, sensorless flux vector control (SFVC), closedloop vector control (CLVC) and V/F control.

4) Multiple communication protocols

It supports communication via Modbus-RTU, PROFIBUS-DP, CANlink and CANopen.

5) Multiple encoder types

It supports various encoders such as differential encoder, open-collector encoder, resolver and UVW encoder.

6) All-new SFVC algorithm

It introduces an all-new sensorless flux vector control (SFVC) algorithm that gives better low-speed stability, enhanced low-frequency loading capacity, and supports torque control.

7) User programmable function

The JL90PC1 programmable card enables you to write programs in ladder diagram. Its programming environment is compatible with that of the H1U series PLC.

8) Advanced background software

The background monitoring software helps to achieve functions of parameter upload & download and a real-time oscilloscope.

9) Other new functions

The newly added functions of the HS930 series AC drive are described as below:

Function	Description
Virtual I/O	It can implement various simple logic functions.
Motor overheat protection	The optional JL91IO1 extension card enables AI3 to receive the signal from the motor temperature sensor input (PT100, PT1000) thereby providing motor overheat protection.
Rapid current limit	It helps to avoid frequent occurrence of overcurrent faults of the AC drive.

Function	Description
Multi-motor switchover	Four motors can be switched over via four groups of motor parameters.
Restoring user parameters	It allows you to save or restore the parameters set by yourself.
Higher-accuracy AI/AO	The AI/AO accuracy can reach almost 20 mv via factory correction or on-site correction.
Customized parameter display	You can customize the parameters that need to be displayed.
Modified parameter display	You can view the modified parameters.
Operation selection at fault occurrence	You can select the reaction of the AC drive to a fault occurring, based on the actual need. The reactions are as below: • Coast to stop • Decelerate to stop • Continue to run You can also select the frequency at which the AC drive continues to run.
PID parameters switchover	Two groups of PID parameters can be switched over via terminals or can be automatically switched over according to deviation.
PID feedback loss detection	The PID feedback loss value can be set to realize PID protection.
DI/DO positive or negative logic	You can set the DI/DO positive or negative logic.
DI/DO response delay	You can set DI/DO response delay time.
Power dip ride through	It ensures that the AC drive continues to run for a short time when an instantaneous power failure or sudden voltage reduction occurs.
Timing operation	The AC drive supports timing operation for 6500 minutes at maximum.
User programmable function	The externally connected programmable card helps you to realize secondary development.
Load allocation	Load allocation can be implemented between two 930 series AC drives through point-to-point communication.

Product Checking

Upon unpacking, check:

- Whether the nameplate model and AC drive ratings are consistent with your order. The box contains the AC drive, certificate of conformity, user manual and warranty card.
- Whether the AC drive is damaged during transportation. If you find any omission or damage, contact Jvlian or your supplier immediately.

First-time Use

For the users who use this product for the first time, read the manual carefully. If in doubt concerning some functions or performances, contact the technical support personnel of HARS to ensure correct use.

CE Mark

The CE mark on the HS930 declares that the AC drive complies with the European low voltage directive (LVD) and EMC directive.

CE

HS930 series AC drive complies with the following LVD and EMC directives and standards:

Directive	Directive Code	Standard
EMC Directive	2004/18/EC	EN 61800-3 EN 55011 EN 61000-6-2
LVD Directive	2006/95/EEC	EN 61800-5-1

HS930 series AC drive complies with the requirements of standard IEC/EN 61800-3 on the condition of correct installation and use by following the instructions in chapter 7.

Contents

Preface.....1
Introduction.....1
Chapter 1 Safety Information and Precautions.....5
1.1 Safety Information.....5
1.2 General Precautions.....7
Chapter 2 Product Information.....11
2.1 Designation Rules and Nameplate of the JL930.....12
2.2 Technical Specifications.....13
2.3 Peripheral Electrical Devices and System Configuration.....16
Chapter 3 Mechanical and Electrical Installation.....19
3.1 Mechanical Installation.....19
3.2 Electrical Installation.....19
Chapter 4 Operation, Display and Application Examples.....30
4.1 Operation Panel.....30
4.2 Viewing and Modifying Function Codes.....32
4.3 Structure of Function Codes.....33
4.4 Starting or Stopping the AC Drive.....34
4.5 Setting the Running Frequency.....39
4.6 Setting and Auto-tuning of Motor Parameters.....45
4.7 Use of DI Terminals.....48
4.8 Use of DO Terminals.....49
4.9 Use of AI Terminals.....49
4.10 Use of AO Terminals.....50
4.11 Use of Serial Communication.....51
4.12 Password Setting.....51
4.13 Parameter Saving and Default Setting Restoring.....52
Chapter 5 Function Code Table.....53
5.1 Standard Function Parameters.....53
5.2 Monitoring Parameters.....114
Chapter 6 Description of Function Codes.....117

Group H00: Basic Parameters..... 117
Group H01: Start/Stop Control..... 129
Group H02: Motor 1 Parameters..... 135
Group H03: Vector Control Parameters..... 141
Group H04: V/F Control Parameters..... 144
Group H05: Input Terminals..... 150
Group H06: Output Terminals..... 162
Group H07: Operation Panel and Display..... 167
Group H08: Auxiliary Functions..... 173
Group H09: Process Control PID Function..... 184
Group H10: Multi-Reference and Simple PLC Function..... 190
Group H11: Fault and Protection..... 194
Chapter 7 Selection and Dimensions 206
7.1 Electrical Specifications of the HS930 206
7.2 Physical Appearance and Overall Dimensions of the HS930 208
7.3 Selection of Peripheral Electrical Devices 212
7.4 Selection and Installation of External DC Reactor 213
7.5 Physical Dimensions of External Operation Panel 216
7.6 Selection of Braking Unit and Braking Resistor 216
Chapter 8 Maintenance and Troubleshooting..... 219
8.1 Routine Repair and Maintenance of the JL930..... 219
8.2 Warranty Agreement..... 220
8.3 Faults and Solutions..... 220
8.4 Common Faults and Solutions..... 225

1

Safety Information and Precautions

Chapter 1 Safety Information and Precautions

In this manual, the notices are graded based on the degree of danger:

⚠ •DANGER indicates that failure to comply with the notice will result in severe personal injury or even death.

⚠ • WARNING indicates that failure to comply with the notice will result in personal injury or property damage.

Read this manual carefully so that you have a thorough understanding. Installation, commissioning or maintenance may be performed in conjunction with this chapter. Jvlian will assume no liability or responsibility for any injury or loss caused by improper operation.

1.1 Safety Information

Use Stage	Safety Grade	Precautions
Before installation	⚠ DANGER	• Do not install the equipment if you find water seepage, component missing or damage upon unpacking. • Do not install the equipment if the packing list does not conform to the product you received.
	⚠ WARNING	• Handle the equipment with care during transportation to prevent damage to the equipment. • Do not use the equipment if any component is damaged or missing. Failure to comply will result in personal injury. • Do not touch the components with your hands. Failure to comply will result in static electricity damage.
During installation	⚠ DANGER	• Install the equipment on incombustible objects such as metal, and keep it away from combustible materials. Failure to comply may result in a fire. • Do not loosen the fixed screws of the components, especially the screws with red mark.
	⚠ WARNING	• Do not drop wire end or screw into the AC drive. Failure to comply will result in damage to the AC drive. • Install the AC drive in places free of vibration and direct sunlight. • When two AC drives are laid in the same cabinet, arrange the installation positions properly to ensure the cooling effect.
At wiring	⚠ DANGER	• Wiring must be performed only by qualified personnel under instructions described in this manual. Failure to comply may result in unexpected accidents. • A circuit breaker must be used to isolate the power supply and the AC drive. Failure to comply may result in a fire. • Ensure that the power supply is cut off before wiring. Failure to comply may result in electric shock. • Tie the AC drive to ground properly by standard. Failure to comply may result in electric shock.

Use Stage	Safety Grade	Precautions
	⚠ WARNING	• Never connect the power cables to the output terminals (U, V, W) of the AC drive. Pay attention to the marks of the wiring terminals and ensure correct wiring. Failure to comply will result in damage to the AC drive. • Never connect the braking resistor between the DC bus terminals (+) and (-). Failure to comply may result in a fire. • Use wire sizes recommended in the manual. Failure to comply may result in accidents. • Use a shielded cable for the encoder, and ensure that the shielding layer is reliably grounded.
Before power-on	⚠ DANGER	• Check that the following requirements are met: – The voltage class of the power supply is consistent with the rated voltage class of the AC drive. – The input terminals (R, S, T) and output terminals (U, V, W) are properly connected. – No short-circuit exists in the peripheral circuit. – The wiring is secured. Failure to comply will result in damage to the AC drive • Do not perform the voltage resistance test on any part of the AC drive because such test has been done in the factory. Failure to comply will result in accidents.
	⚠ WARNING	• Cover the AC drive properly before power-on to prevent electric shock. • All peripheral devices must be connected properly under the instructions described in this manual. Failure to comply will result in accidents
After power-on	⚠ DANGER	• Do not open the AC drive's cover after power-on. Failure to comply may result in electric shock. • Do not touch any I/O terminal of the AC drive. Failure to comply may result in electric shock.
	⚠ WARNING	• Do not touch the rotating part of the motor during the motor auto-tuning or running. Failure to comply will result in accidents. • Do not change the default settings of the AC drive. Failure to comply will result in damage to the AC drive.
During operation	⚠ DANGER	• Do not touch the fan or the discharging resistor to check the temperature. Failure to comply will result in personal burnt. • Signal detection must be performed only by qualified personnel during operation. Failure to comply will result in personal injury or damage to the AC drive.

Use Stage	Safety Grade	Precautions
	⚠ WARNING	• Avoid objects falling into the AC drive when it is running. Failure to comply will result in damage to the AC drive. • Do not start/stop the AC drive by turning the contactor ON/OFF. Failure to comply will result in damage to the AC drive.
During maintenance	⚠ DANGER	• Repair or maintenance of the AC drive may be performed only by qualified personnel. Failure to comply will result in personal injury or damage to the AC drive. • Do not repair or maintain the AC drive at power-on. Failure to comply will result in electric shock. • Repair or maintain the AC drive only ten minutes after the AC drive is powered off. This allows for the residual voltage in the capacitor to discharge to a safe value. Failure to comply will result in personal injury. • Ensure that the AC drive is disconnected from all power supplies before starting repair or maintenance on the AC drive. • Set and check the parameters again after the AC drive is replaced. • All the pluggable components must be plugged or removed only after power-off. • The rotating motor generally feeds back power to the AC drive. As a result, the AC drive is still charged even if the motor stops, and the power supply is cut off. Thus ensure that the AC drive is disconnected from the motor before starting repair or maintenance on the AC drive.

1.2 General Precautions

1) Requirement on residual current device (RCD)

The AC drive generates high leakage current during running, which flows through the protective earthing (PE) conductor. Thus install a type-B RCD at primary side of the power supply. When selecting the RCD, you should consider the transient and steadystate leakage current to ground that may be generated at startup and during running of the AC drive. You can select a specialized RCD with the function of suppressing high harmonics or a general-purpose RCD with relatively large residual current.

2) High leakage current warning

The AC drive generates high leakage current during running, which flows through the PE conductor. Earth connection must be done before connection of power supply. Earthing shall comply with local regulations and related IEC standards.

3) Motor insulation test

Perform the insulation test when the motor is used for the first time, or when it is reused after being stored for a long time, or in a regular check-up, in order to prevent the poor insulation of motor windings from damaging the AC drive. The motor must be

disconnected from the AC drive during the insulation test. A 500-V mega-Ohm meter is recommended for the test. The insulation resistance must not be less than 5 MΩ.

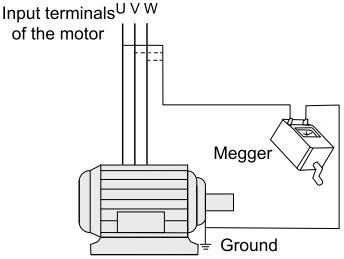

4) Thermal protection of motor

If the rated capacity of the motor selected does not match that of the AC drive, especially when the AC drive's rated power is greater than the motor's, adjust the motor protection parameters on the operation panel of the AC drive or install a thermal relay in the motor circuit for protection.

5) Running at over 50 Hz

The AC drive provides frequency output of 0 to 3200 Hz (Up to 300 Hz is supported if the AC drive runs in CLVC and SFVC mode). If the AC drive is required to run at over 50 Hz, consider the capacity of the machine.

6) Vibration of mechanical device

The AC drive may encounter the mechanical resonance point at some output frequencies, which can be avoided by setting the skip frequency.

7) Motor heat and noise

The output of the AC drive is pulse width modulation (PWM) wave with certain harmonic frequencies, and therefore, the motor temperature, noise, and vibration are slightly greater than those when the AC drive runs at power frequency (50Hz).

8) Voltage-sensitive device or capacitor on output side of the AC drive

Do not install the capacitor for improving power factor or lightning protection voltagesensitive resistor on the output side of the AC drive because the output of the AC drive is PWM wave. Otherwise, the AC drive may suffer transient overcurrent or even be damaged.

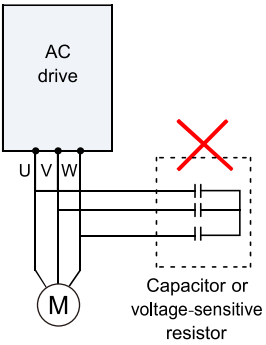

9) Contactor at the I/O terminal of the AC drive

When a contactor is installed between the input side of the AC drive and the power supply, the AC drive must not be started or stopped by switching the contactor on or off. If the AC drive has to be operated by the contactor, ensure that the time interval between switching is at least one hour since frequent charge and discharge will shorten the service life of the capacitor inside the AC drive.

When a contactor is installed between the output side of the AC drive and the motor, do not turn off the contactor when the AC drive is active. Otherwise, modules inside the AC drive may be damaged.

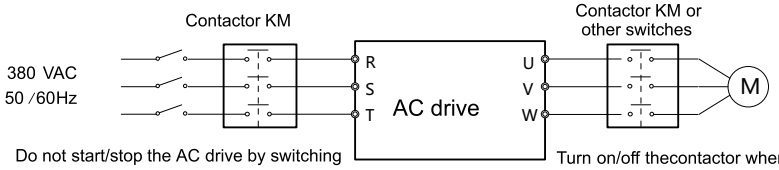

Do not start/stop the AC drive by switching the contactor on /off. If the AC drive has to be operated by the contactor , ensure that the time interval is at least one hour . Otherwise, modules inside the AC drive may be damaged .

Turn on/off thecontactor when the AC drive has no output .

10) When external voltage is out of rated voltage range

The AC drive must not be used outside the allowable voltage range specified in this manual. Otherwise, the AC drive's components may be damaged. If required, use a corresponding voltage step-up or step-down device.

11) Prohibition of three-phase input changed into two-phase input

Do not change the three-phase input of the AC drive into two-phase input. Otherwise, a fault will result or the AC drive will be damaged.

12) Surge suppressor

The AC drive has a built-in voltage dependent resistor (VDR) for suppressing the surge voltage generated when the inductive loads (electromagnetic contactor,

electromagnetic relay, solenoid valve, electromagnetic coil and electromagnetic brake) around the AC drive are switched on or off. If the inductive loads generate a very high surge voltage, use a surge suppressor for the inductive load or also use a diode.

Note

Do not connect the surge suppressor on the output side of the AC.

13) Altitude and de-rating

In places where the altitude is above 1000 m and the cooling effect reduces due to thin air, it is necessary to de-rate the AC drive. Contact Jvlian for technical support.

14) Some special usages

If wiring that is not described in this manual such as common DC bus is applied, contact the agent or Jvlian for technical support.

15) Disposal

The electrolytic capacitors on the main circuits and PCB may explode when they are burnt. Poisonous gas is generated when the plastic parts are burnt. Treat them as ordinary industrial waste.

16) Adaptable Motor

- The standard adaptable motor is adaptable four-pole squirrel-cage asynchronous induction motor or PMSM. For other types of motor, select a proper AC drive according to the rated motor current.
- The cooling fan and rotor shaft of non-variable-frequency motor are coaxial, which results in reduced cooling effect when the rotational speed declines. If variable speed is required, add a more powerful fan or replace it with variable-frequency motor in applications where the motor overheats easily.
- The standard parameters of the adaptable motor have been configured inside the AC drive. It is still necessary to perform motor auto-tuning or modify the default values based on actual conditions. Otherwise, the running result and protection performance will be affected.
- The AC drive may alarm or even be damaged when short-circuit exists on cables or inside the motor. Therefore, perform insulation short-circuit test when the motor and cables are newly installed or during routine maintenance. During the test, make sure that the AC drive is disconnected from the tested parts.

2

Product Information

Chapter 2 Product Information

2.1 Designation Rules and Nameplate of the HS930

Figure 2-1 Designation rules and nameplate of the HS930

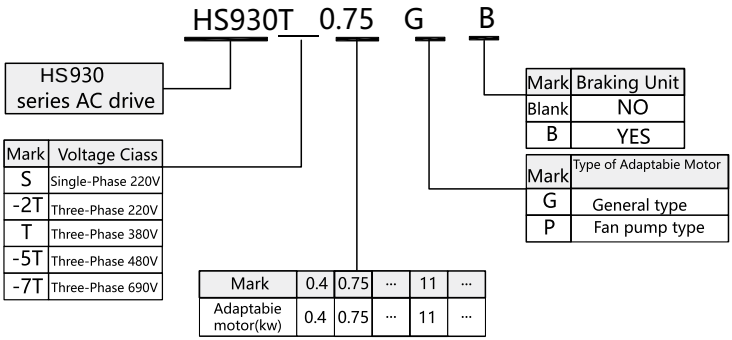

The housing types of the 930 models with different voltage and power classes are listed in the following table.

Table 2-1 Housing types for different voltage and power classes

Voltage & Power Class	Housing Type
Single-phase 220 V	
0.4–2.2 kW	Plastic housing
Three-phase 220 V	
0.4–7.5 kW	Plastic housing
11–75 kW	Sheet metal housing
Three-phase 380 V	
0.75–15 kW	Plastic housing
18.5–400 kW	Sheet metal housing
Three-phase 480 V	
0.75–15 kW	Plastic housing
18.5–400 kW	Sheet metal housing
Three-phase 690 V	
55–500 kW	Sheet metal housing

2.2 Technical Specifications

Table 2-2 Technical specifications of the HS930

Item		Specifications	
Standard functions	Maximum frequency	• Vector control: 0–300 Hz • V/F control: 0–320 Hz	
	Carrier frequency	0.5–16 kHz The carrier frequency is automatically adjusted based on the load features.	
	Input frequency resolution	Digital setting: 0.01 Hz Analog setting: maximum frequency x 0.025%	
	Control mode	• Sensorless flux vector control (SFVC) • Closed-loop vector control (CLVC) • Voltage/Frequency (V/F) control	
	Startup torque	• G type: 0.5 Hz/150% (SFVC); 0 Hz/180% (CLVC) • P type: 0.5 Hz/100%	
	Speed range	1:100 (SFVC)	1:1000 (CLVC)

Item		Specifications
	Speed stability accuracy	• ± 0.5% (SFVC) • ± 0.02% (CLVC)
	Torque control accuracy	±5% (CLVC)
Standard functions	Overload capacity	• G type: 60s for 150% of the rated current, 3s for 180% of the rated current • P type: 60s for 120% of the rated current, 3s for 150% of the rated current
	Torque boost	• Fixed boost • Customized boost 0.1%–30.0%
	V/F curve	• Straight-line V/F curve • Multi-point V/F curve • N-power V/F curve (1.2-power, 1.4-power, 1.6-power, 1.8-power, square)
	V/F separation	Two types: complete separation; half separation
	Ramp mode	• Straight-line ramp • S-curve ramp Four groups of acceleration/deceleration time with the range of 0.0–6500.0s
	DC braking	DC braking frequency: 0.00 Hz to maximum frequency Braking time: 0.0–36.0s Braking action current value: 0.0%–100.0%
	JOG control	JOG frequency range: 0.00–50.00 Hz JOG acceleration/deceleration time: 0.0–6500.0s
	Onboard multiple preset speeds	It implements up to 16 speeds via the simple PLC function or combination of DI terminal states.
	Onboard PID	It realizes process-controlled closed loop control system easily.
	Auto voltage regulation (AVR)	It can keep constant output voltage automatically when the mains voltage changes.
	Overvoltage/ Overcurrent stall control	The current and voltage are limited automatically during the running process so as to avoid frequent tripping due to overvoltage/overcurrent.

Item		Specifications
	Torque limit and control	It can limit the torque automatically and prevent frequent over current tripping during the running process. Torque control can be implemented in the CLVC mode.
Individualized functions	High performance	Control of asynchronous motor and synchronous motor are implemented through the high-performance current vector control Electric.
	Power dip ride through	The load feedback energy compensates the voltage reduction so that the AC drive can continue to run for a short time.
	Rapid current limit	It helps to avoid frequent overcurrent faults of the AC drive.
	Virtual I/Os	Five groups of virtual DI/Dos can realize simple logic control.
	Timing control	Time range: 0.0–6500.0 minutes
Individualized functions	Multi-motor switchover	Four motors can be switched over via four groups of motor parameters.
	Multiple communication protocols	It supports communication via Modbus-RTU, PROFIBUSDP, CANlink and CANopen.
	Motor overheat protection	The optional I/O extension card enables AI3 to receive the motor temperature sensor input (PT100, PT1000) so as to realize motor overheat protection.
	Multiple encoder types	It supports various encoders such as differential encoder, open-collector encoder, resolver, UVW encoder, and SIN/COS encoder.
	User programmable function	The optional programming card helps you to realize secondary development. Its programming environment is compatible with that of the PLC of Inovance.
	Advanced background software	It supports the operation of AC drive parameters and virtual oscillograph function, via which the state inside the AC drive is monitored.
RUN	Running command source	• Operation panel • Control terminals • Serial communication port You can perform switchover between these sources in various ways.

Item		Specifications
	Frequency source	There are a total of 10 frequency sources, such as digital setting, analog voltage setting, analog current setting, pulse setting and serial communication port setting. You can perform switchover between these sources in various ways.
	Auxiliary frequency source	There are ten auxiliary frequency sources. It can implement fine tuning of auxiliary frequency and frequency synthesis.
	Input terminal	Standard: 5 digital input (DI) terminals, one of which supports up to 100 kHz high-speed pulse input 2 analog input (AI) terminals, one of which only supports 0–10 V voltage input and the other supports 0–10 V voltage input or 4–20 mA current input Expanding capacity: 5 DI terminals 1 AI terminal that supports -10–10 V voltage input and also supports PT100\PT1000
RUN	Output terminal	Standard 1 high-speed pulse output terminal (open-collector) that supports 0–100 kHz square wave signal output 1 digital output (DO) terminal 1 relay output terminal 1 analog output (AO) terminal that supports 0–20 mA current output or 0–10 V voltage output Expanding capacity: 1 DO terminal 1 relay output terminal 1 AO terminal that supports 0–20 mA current output or 0–10 V voltage output
Display and operation on the operation panel	LED display	It displays the parameters.
	Key locking and function selection	It can lock the keys partially or completely and define the function range of some keys so as to prevent mis-function.
	Protection mode	Motor short-circuit detection at power-on, input/output phase loss protection, overcurrent protection, overvoltage protection, undervoltage protection, overheat protection and overload protection

Item		Specifications
	Optional parts	LCD operation panel, braking unit, I/O extension card 1, I/O extension card 2, user programmable card, RS485 communication card, PROFIBUS-DP communication card, CANlink communication card, CANopen communication card, differential input PG card, UVW differential input PG card, resolver PG card and OC input PG card
Environment	Installation location	Indoor, free from direct sunlight, dust, corrosive gas, combustible gas, oil smoke, vapour, drip or salt.
	Altitude	Lower than 1000 m
	Ambient temperature	-10°C to +40°C (de-rated if the ambient temperature is between 40°C and 50°C)
	Humidity	Less than 95%RH, without condensing
	Vibration	Less than 5.9 m/s2 (0.6 g)
	Storage temperature	-20°C to +60°C
	IP level	IP20
	Pollution degree	PD2
	Power distribution system	TN , TT

2.3 Peripheral Electrical Devices and System Configuration

When the HS930 is used to control the synchronous or asynchronous motor, forming a control system, it is necessary to install various electrical devices on the input and output sides of the AC drive to ensure the system safety and stability.

In addition, several optional extension cards are available for the HS930 to implement various functions. The system configuration of three-phase 220 V/380 V/480 V voltage class, 3.7 kW and above is shown in the following figure.

Figure 2-4 System configuration of three-phase 220 V/380 V/480 V voltage class, 3.7 kW and above

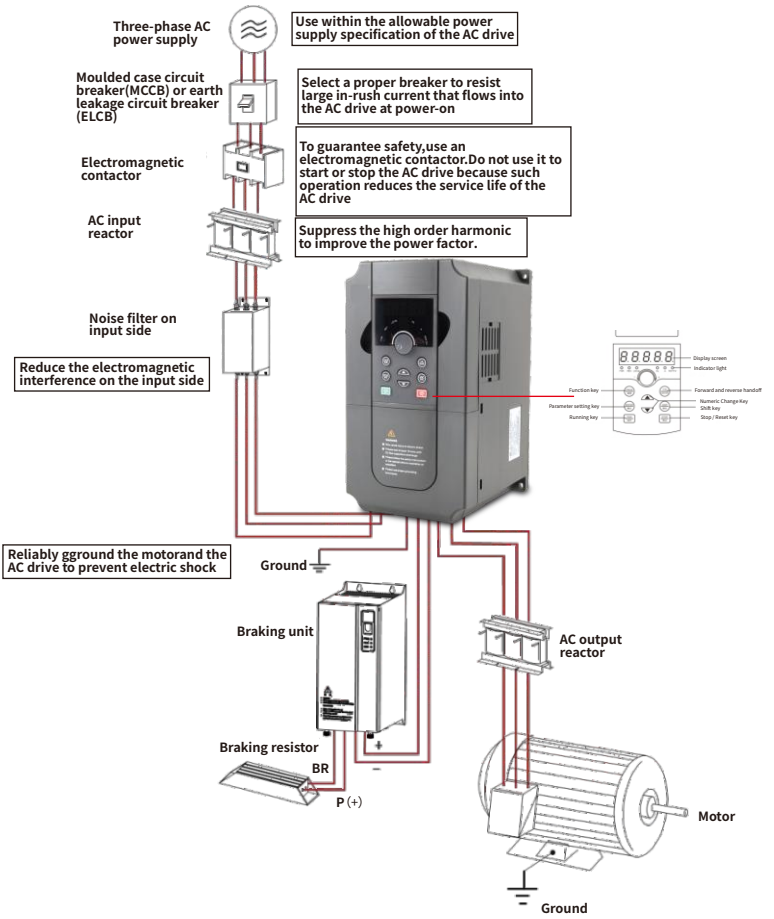

2.3.1 Description of Peripheral Electrical Devices

Table 2-3 Description of peripheral electrical devices

Part	Mounting Location	Function Description
MCCB	Power receiving side	Interrupt the power supply when overcurrent occurs on downstream devices
Contactor	Between MCCB and AC drive input side	Start and stop the AC drive. Do not start and stop the AC drive frequently by switching the contactor on and off (less than twice per minute) nor use it to directly start the AC drive.

AC input reactor	AC drive input side	• Improve the power factor of the input side. • Eliminate the higher harmonics of the input side effectively and prevent other devices from being damaged due to distortion of the voltage waveform. • Eliminate the input current unbalance due to unbalance between the power phases.
EMC Input filter	AC drive input side	• Reduce the external conduction and radiation interference of the AC drive. • Decrease the conduction interference flowing from the power end to the AC drive and improve the antiinterference capacity of the AC drive.
DC reactor	930 series AC drive of 7.5G and above configured with DC reactor as standard	• Improve the power factor of the input side. • Improve the efficiency and thermal stability of the AC drive. • Eliminate the impact of higher harmonics of the AC drive input side and reduce the external conduction and radiation interference.
AC output reactor	Between AC drive output side and the motor, close to the AC drive	The output side of the AC drive generally has much higher harmonics. When the motor is far from the AC drive, there is much distributed capacitance in the circuit and certain harmonics may cause resonance in the circuit, bringing about the following two impacts: • Degrade the motor insulation performance and damage the motor in the long run. • Generate large leakage current and cause frequent AC drive protection trips. If the distance between the AC drive and the motor is greater than 100 m, install an AC output reactor.

1) Do not install the capacitor or surge suppressor on the output side of the AC drive. Otherwise, it may cause faults to the AC drive or damage to the capacitor and surge suppressor.

2) Inputs/Outputs (main circuit) of the AC drive contain harmonics, which may interfere with the communication device connected to the AC drive. Therefore, install an anti-interference filter to minimize the interference.

3) For more details on peripheral devices, refer to related selection manual.

3

Mechanical and Electrical Installation

Chapter 3 Mechanical and Electrical Installation

3.1 Mechanical Installation

3.1.1 Installation Environment Requirements

Item	Requirements
Ambient temperature	-10°C to +50°C
Heat dissipation	Install the AC drive on the surface of an incombustible object, and ensure that there is sufficient space around for heat dissipation. Install the AC drive vertically on the support using screws.
Mounting location	Free from direct sunlight, high humidity and condensation
	Free from corrosive, explosive and combustible gas
	Free from oil dirt, dust and metal powder
Vibration	Less than 0.6 g Far away from the punching machine or the like
Protective enclosure	The HS930 series AC drives of plastic housing are the whole unit built-in products operated through remote control and need to be installed in the final system.The final system must have the required fireproof cover, electrical protective cover and mechanical protective cover, and satisfy the regional laws & regulations and related IEC requirements.

3.1.2 Installation Clearance Requirements

The clearance that needs to be reserved varies with the power class of the HS930, as shown in the following figure.

Figure 3-1 Clearance around the HS930 for installation

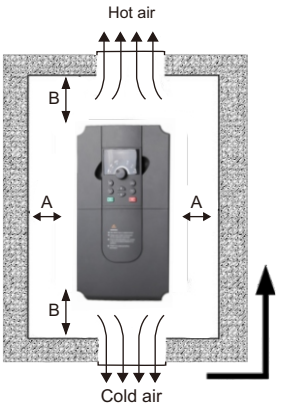

Installation clearance requirements on the HS930 series AC drives of different power classes

Power Class	Clearance Requirements	
0.4–15 kW	A ⩾10 mm	B ⩾100 mm
18.5–22 kW	A ⩾10 mm	B ⩾200 mm
22–37 kW	A ⩾50 mm	B ⩾200 mm
37–630 kW	A ⩾50 mm	B ⩾300 mm

The AC drive shall be installed vertically upward .

The HS930 series AC drive dissipates bottom to the top. When multiple AC required to work together, install them vertically upward . heat from the drives are side by side.For application installing multiple AC drives , if one row of AC drives need to be installed above another row, install an insulation guide plate to prevent AC drives in the lower row from heating those in the upper row and causing faults.

Figure 3-2 Installation of the insulation guide plate

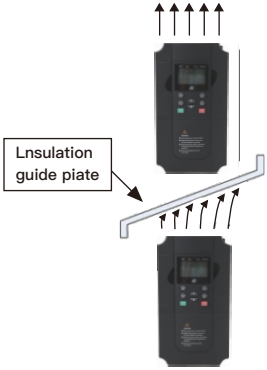

3.1.3 Mechanical Installation Method and Process

The HS930 series AC drives have two housing types, plastic housing and sheet metal housing, according to different voltage and power classes. The HS930 supports both wallmounting installation and embedded installation in different applications.

1) Wall-mounting installation of the HS930 (plastic housing)

Figure 3-3 Wall-mounting installation of the HS930 (plastic housing)



2) Embedded installation of the HS930 (plastic housing)

Figure 3-4 External hanging bracket for the HS930

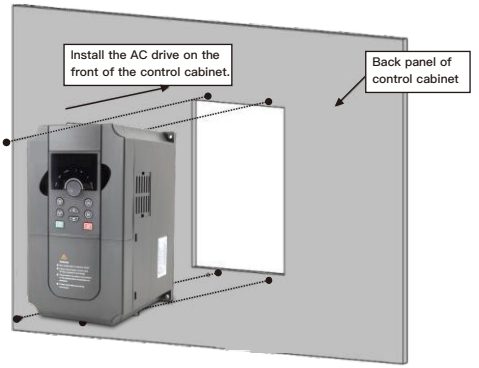

Figure 3-5 Embedded installation effect of the HS930 (plastic housing)



3) Wall-mounting installation of the HS930 (sheet metal housing)

Figure 3-6 Wall-mounting installation of the HS930 (sheet metal housing)

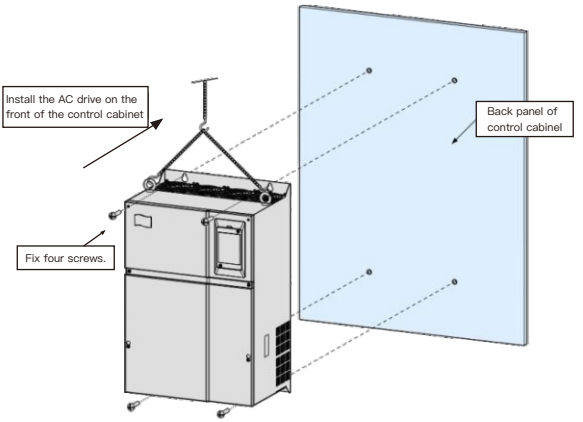

Figure 3–8 Hoistng the HS930 (sheet metal housing)

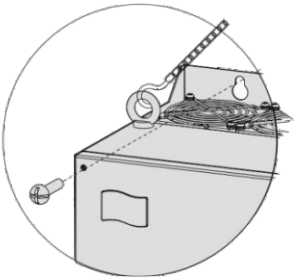

3.2 Electrical Installation

3.2.1 Description of Main Circuit Terminals

■ Description of Main Circuit Terminals of Single-phase AC drive

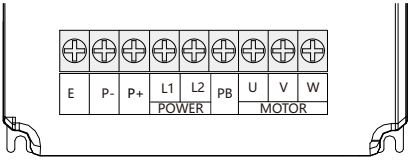

Table 3-1 Description of main circuit terminals of single-phase AC drive

Terminal	Name	Description
L1, L2	Single-phase power supply input terminals	Connect to the single-phase 220 VAC power supply.
P+、P-	Positive and negative terminals of DC bus	Common DC bus input point.
P+、PB	Connecting terminals of braking resistor	Connect to a braking resistor.
U, V, W	AC drive output terminals	Connect to a three-phase motor.
E	Grounding terminal	Must be grounded.

■ Description of Main Circuit Terminals of Three-phase AC drive

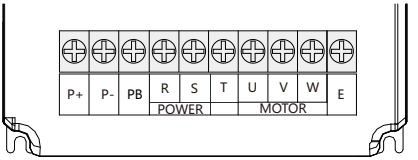

Table 3-2 Description of main circuit terminals of three-phase AC drive

Terminal	Name	Description
R, S, T	Three-phase power supply input terminals	Connect to the three-phase AC power supply
P+、P-	Positive and negative terminals of DC bus	Common DC bus input point Connect the external braking unit to the AC drive of 18.5 kW and above (220 V) and 37 kW and above (other voltage classes).
P+、PB	Connecting terminals of braking resistor	Connect to the braking resistor for the AC drive of 15 kW and below (220 V) and 30 kW and below (other voltage classes).
P, P+	Connecting terminals of external reactor	Connect to an external reactor.
U, V, W	AC drive output terminals	Connect to a three-phase motor.
E	Grounding terminal	Must be grounded.

3.2.2 Wiring of AC Drive Main Circuit

Table 3-3 Wiring of the AC drive main circuit

Single-phase 220 V	Three-phase 220 V (15 kW and Below)
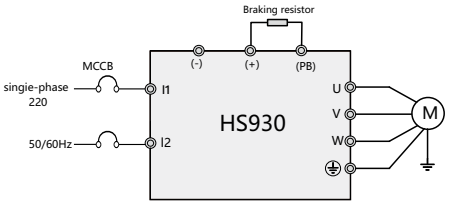	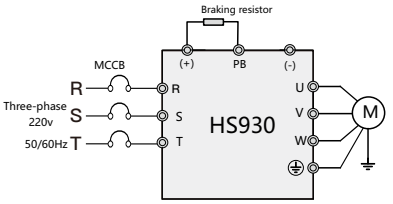
Three-phase 220 V (18.5–30 kW)	**Three-phase 220 V (37 kW and Above)**
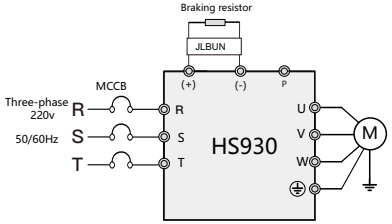	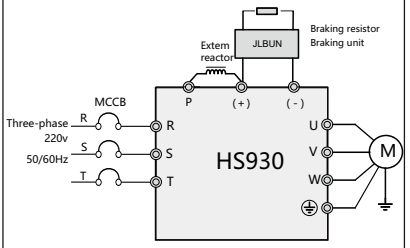
Three-phase 380/480 V (30 kW and Below)	**Three-phase 380/480 V (37–55 kW)**
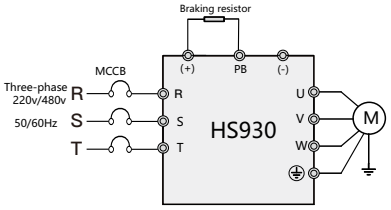	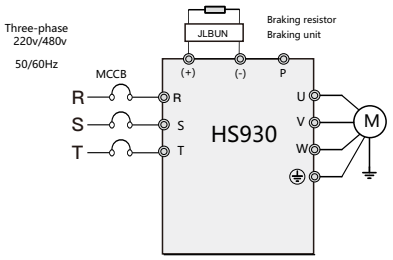
Three-phase 380/480 V (75 kW and Above)	**Three-phase 690 V**

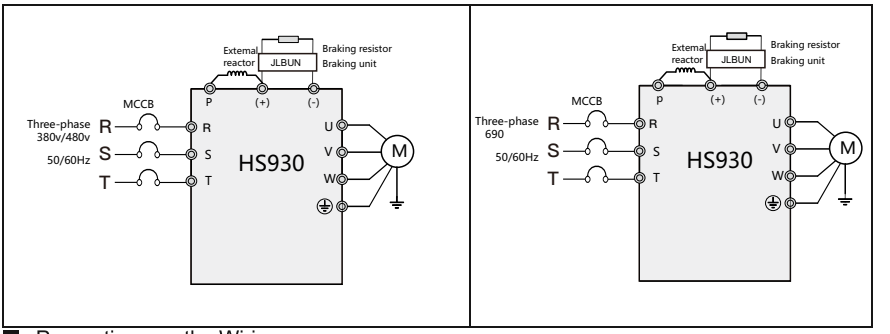

■ Precautions on the Wiring

1) Power input terminals L1, L2 or R, S, T

- The cable connection on the input side of the AC drive has no phase sequence requirement.
- The specification and installation method of external power cables must comply with the local safety regulations and related IEC standards.
- Use copper conductors of a proper size as power cables according to the recommended values in section7.3.

2) DC bus terminals (P+),(P−)

- Terminals (P+) and (P−) of DC bus have residual voltage after the AC drive is switched off. After indicator CHARGE goes off, wait at least 10 minutes before touching the equipment Otherwise, you may get electric shock.
- connecting external braking components for the AC drive of 18.5 kW and above (220 V) and 37 kW and above (other voltage classes), do not reverse poles (P+) and (P−) Otherwise, it may damage the AC drive and even cause a fire.
- The cable length of the braking unit shall be no longer than 10 m. Use twisted pair wire or pair wires for parallel connection.
- Do not connect the braking resistor directly to the DC bus. Otherwise, it may damage the AC drive and even cause fire.

3) Braking resistor connecting terminals (P+) PB

- The connecting terminals of the braking resistor are effective only for the AC configured with the built-in braking unit.
- The cable length of the braking resistor shall be less than 5 m. Otherwise, it may damage the AC drive.

4) External reactor connecting terminals P, (P+)

For the AC drive of 37 kW and above (220 V) and 75 kW and above (other voltage classes), remove the jumper bar across terminals P and (P+) and install the reactor between the two terminals.

5) AC drive output terminals U, V, W

- The specification and installation method of external power cables must comply with the local safety regulations and related IEC standards.

Use copper conductors of a proper size as power cables according to the recommended values in section 8.3.

- The capacitor or surge absorber cannot be connected to the output side of the AC drive. Otherwise, it may cause frequent AC drive fault or even damage the AC drive.
- If the motor cable is too long, electrical resonance will be generated due to the impact of distributed capacitance. This will damage the motor insulation or generate higher leakage current, causing the AC drive to trip in overcurrent protection. If the motor cable is greater than 100 m long, an AC output reactor must be installed close to the AC drive.

6) Terminal E

- This terminal must be reliably connected to the main earthing conductor. Otherwise, it may cause electric shock, mal-function or even damage to the AC drive.
- Do not connect the earthing terminal to the neutral conductor of the power supply.
- The impedance of the E conductor must be able to withstand the large shortcircuit current that may arise when a fault occurs.
- Select the size of the E conductor according to the following table:

Cross-sectional Area of a Phase Conductor (S)	Min. Cross-sectional Area of Protective Conductor (Sp)
$S \leqslant 16\ mm^2$	S
$16\ mm^2 < S \leqslant 35\ mm^2$	$16\ mm^2$
$35\ mm^2 < S$	S/2

- You must use a yellow/green cable as the E conductor.

7) Requirements on upstream protection device

- Install upstream protection device on the input power circuit. The protection device must provide the protections on overcurrent, short-circuit and electrical solation.
- When selecting the protective device, you should consider the current capacity of the power cable, system overload capacity and short-circuit capacity of the upstream power distribution of the equipment. Generally, make selection according to the recommended values in section 7.4.

3.2.3 Description of Control Circuit Terminals

■ Terminal Arrangement of Control Circuit

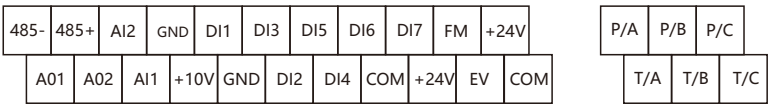

■ Description of Control Circuit Terminals

Table 3-3 Description of control circuit terminals

Type	Terminal	Name	Function Description
Power supply	+10V-GND	External +10 V power supply	Provide +10 V power supply to external unit. Generally, it provides power supply to external potentiometer with resistance range of 1–5 kΩ. Maximum output current: 10 mA
	+24V-COM	External +24 V power supplyApplying to Overvoltage Category II circuit	Provide +24 V power supply to external unit. Generally, it provides power supply to DI/DO terminals and external sensors. Maximum output current: 200 mA
Analog input	AI1-GND AI2-GND	Analog input	Input voltage range: 0–10 VDC Impedance: KΩ
Digital input	DI1	Digital input 1	Optical coupling isolation, compatible with dual polarity input Impedance: 2.4KΩ Voltage range for level input: 9–30 V
	DI2	Digital input 2	
	DI3	Digital input 3	
	DI4	Digital input 4	
	DI6	Digital input 6	
	DI7	Digital input 7	
	DI5	High-speed pulse input	Besides features of DI1–DI4,DI6,DI7, it can be used for high-speed pulse input. Maximum input frequency: 100 kHz

Type	Terminal	Name	Function Description
Analog output	AO1-GND	Analog output 1	Voltage or current output is decided by jumper J4. Output voltage range: 0–10 V Output current range: 0–20 mA
	AO1-GND	Analog output 1	Output voltage range: range: 0–20 mA
Digital input	FM-COM	High-speed pulse output	It is limited by H06.05 (FM terminal output mode selection). As high-speed pulse output, the maximum frequency hits 100 kHz. As open-collector output, its specification is the same as that of DO1
Relay output	T/A-T/B	NC terminal	Contact driving capacity: 250 VAC, 3 A, COSø = 0.4 30 VDC, 1 A Applying to Overvoltage Category II circuit
	T/A-T/C	NO terminal	
	T/A-T/B	NC terminal	
	T/A-T/C	NO terminal	

3.2.4 Wiring of AC Drive Control Circuit

Figure 3-14 Wiring mode of the AC drive control circuit

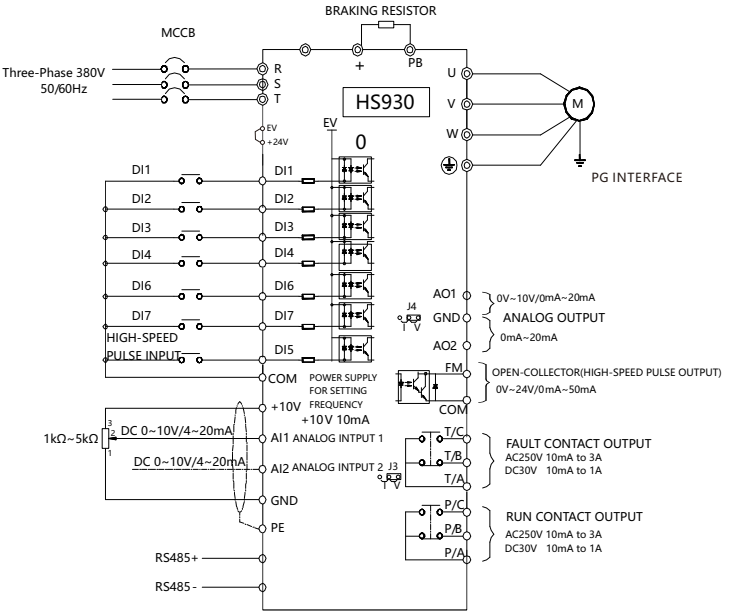

Note

- All HS930 series AC drives have the same wiring mode. The figure here shows the wiring of single-phase 220 VAC drive. ◎ indicates main circuit terminal, while ○ indicates control circuit terminal.

- When the external operation panel is connected, the display of the operation panel on the HS930 goes off.

4

Operation, Display and Application Examples

Chapter 4 Operation, Display and Application Examples

4.1 Operation Panel

You can modify the parameters, monitor the working status and start or stop the HS930 by operating the operation panel, as shown in the following figure.

○LOCAL/REMOT: OFF	Operation panel control
●LOCAL/REMOT: ON	Terminal control
◑LOCAL/REMOT: blinking	Communication control

Figure 4-1 Diagram of the operation panel

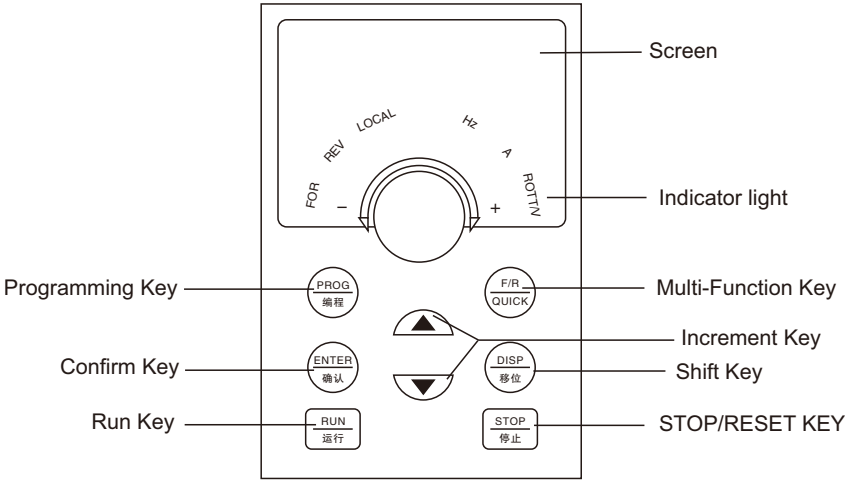

4.1.1 Description of Indicators

- RUN

  ON indicates that the AC drive is in the running state, and OFF indicates that the AC drive is in the stop state.

- LOCAL/REMOT

  It indicates whether the AC drive is operated by means of operation panel, terminals or communication.

- FWD/REV

  ON indicates reverse rotation, and OFF indicates forward rotation.

- TUNE/TC

  Hz ○ RPM ○ A ○ % ○ V

  When the indicator is ON, it indicates torque control mode. When the indicator is blinking slowly, it indicates the auto-tuning state. When the indicator is blinking quickly, it indicates the fault state.

  ●means that the indicator is ON, and ◯ means that the indicator is OFF.

  Hz ● RPM ○ A ○ % ○ V

  Hz: unit of frequency



A: unit of current



V: unit of voltage



RPM: unit of rotational speed

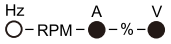

%: percentage

- Digital Display

  The 5-digit LED display is able to display the set frequency, output frequency, monitoring data and fault codes.

4.1.2 Description of Keys on the Operation Panel

Table 4-1 Description of keys on the operation panel

Key	Name	Function
PROG 编程/退出	Programming	Enter or exit Level I menu.
ENTER 确认/存储	Confirm	Enter the menu interfaces level by level, and confirm the parameter setting.
▲	Increment	Increase data or function code.
▼	Decrement	Decrease data or function code.
DISP 移 位	Shift	Select the displayed parameters in turn in the stop or running state, and select the digit to be modified when modifying parameters.
RUN 运 行	RUN	Start the AC drive in the operation panel control mode.
STOP/RST 停止/复位	Stop/Reset	Stop the AC drive when it is in the running state and perform the reset operation when it is in the fault state. The functions of this key are restricted in H07.04.
F/R QUICK/JOG	Multifunction	Perform function switchover (such as quick switchover of command source or direction) according to the setting of H07.03.
	Menu mode selection	Perform switchover between menu modes according to the setting of H16.03.

4.2 Viewing and Modifying Function Codes

The operation panel of the HS930 adopts three-level menu.

The three-level menu consists of function code group (Level I), function code (Level II), and function code setting value (level III), as shown in the following figure.

Figure 4-2 Operation procedure on the operation panel

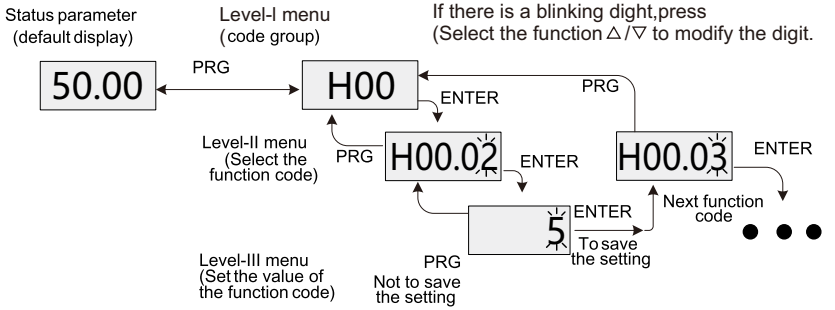

You can return to Level II menu from Level III menu by pressing "PRG" or "ENTER".

- After you "ENTER" press, the system saves the parameter setting first, and then goes back to Level II menu and shifts to the next function code.
- After you "PRG" press, the system does not save the parameter setting, but directly returns to Level II menu and remains at the current function code.

Here is an example of changing the value of H04.02 to 15.00 Hz.

Figure 4-3 Example of changing the parameter value

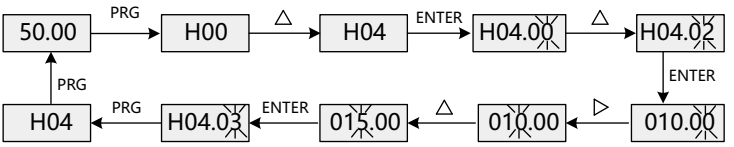

In Level III menu, if the parameter has no blinking digit, it means that the parameter cannot be modified. This may be because:

- Such a function code is only readable, such as, AC drive model, actually detected parameter and running record parameter.
- Such a function code cannot be modified in the running state and can only be changed at stop.

4.3 Structure of Function Codes

The HS930 an advanced product based on HS900 groups H17~H67 and new function codes to group H00~H17

Function Code Group	Function	Description
H00 to H11, H09 to H14, H16	Standard AC drive function code group	Compatible with HS900 series function codes and adding some function codes.
H17 to H25, H29	Advanced function code group	Multi-motor parameters, AI/AO correction, optimization control, PLC card extension function setting.
H67	Running state function code group	Display of AC drive basic parameters

In the function code display state, select the required function code by pressing the key △ or ▽ , as shown in the following figure.

Figure 4-4 Selecting the required function code

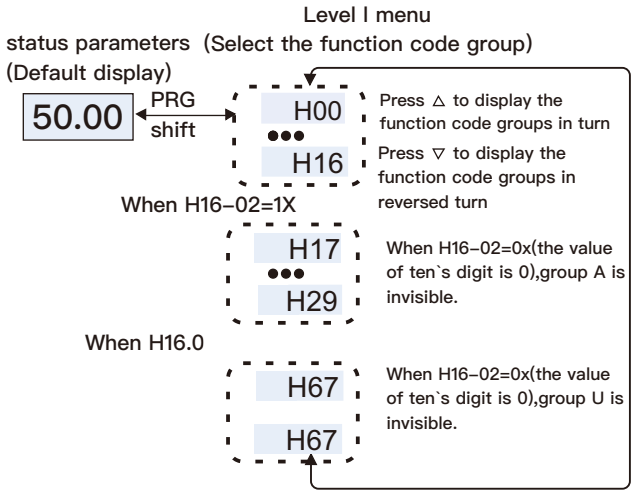

Function Code	Parameter Name	Setting Range	Default
H16.02	AC drive parameter display property	Unit's digit (group H67 display selection) 0: Not display 1: Display Ten's digit (group H17~H32 display selection) 0: Not display 1: Display	11

H16.02 is used to determine whether group H17~H32 and group H67 are displayed.

4.4 Starting or Stopping the AC Drive

4.4.1 Selecting the Start/Stop Command Source

There are three start/stop command sources, namely, operation panel control, terminal control, and communication control. You can select the command source in H00.01.

Function Code	Parameter Name	Setting Range	Description	Default
H00.01	Command source selection	0: Operation panel control (indicator OFF) 1: Terminal control (indicator ON) 2: Communication control (indicator blinking)	Press "RUN" or "STOP" to start or stop the AC drive. A DI terminal needs to be defined as the run/stop terminal. The Modbus-RTU communication protocol is used.	0

- 0: Operation panel control

After you press "RUN", the AC drive starts running (the RUN indicator is ON). After you press "STOP" when the AC drive is in running state, the AC drive stops running (the RUN indicator is OFF).

- 1: Terminal control

This control mode is applicable to scenarios where the DIP switch or electromagnetic button is used to start or stop the application system or scenarios where the dry contact signal is used to start or stop the AC drive.

The switch signal mode is set in H05.10. The input terminal of the start/stop signal is set in H05.00 to H05.09. For details, see the description of H05.10 and H05.00 to H05.09.

Example 1:

To use the DIP switch as the start/stop source, and allocate the forward rotation switch signal to DI2 and the reverse rotation switch signal to DI3, perform the setting as shown in the following figure.

Figure 4-6 Setting of using the DIP switch for start/stop

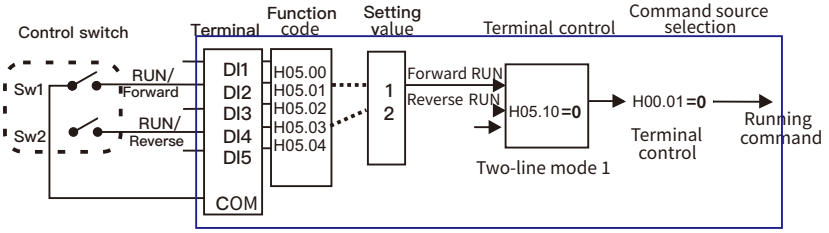

In the preceding figure, when SW1 is ON, the AC drive instructs forward rotation; when SW1 is OFF, the AC drive stops. When SW2 is ON, the AC drive instructs reverse running; when SW2 is OFF, the AC drive stops. If SW1 and SW2 are ON or OFF simultaneously, the AC drive stops.

Example 2:

To use the electromagnetic button as the start/stop source, and allocate the startup signal to DI2, stop signal to DI3 and reverse rotation signal to DI4, perform the setting as shown in the following figure.

Figure 4-7 Setting of using the electromagnetic button for start/stop

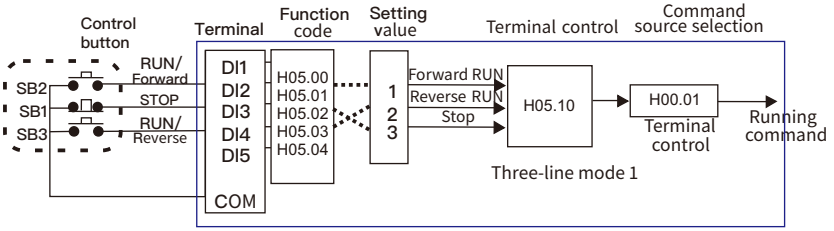

In the preceding figure, SB1 must stay ON during normal start and running. The AC drive stops immediately after SB1 becomes OFF. The signals from SB2 and SB3 become valid once they become ON. The running state of the AC drive is determined by the final actions on the three buttons.

- 2: Communication control

  The most common configuration is when the host computer is used to control running of the AC drive by means of communication, such as the RS485, PROFIBUS-DP, CANlink, and CANopen. The HS930 interacts with the user programmable card also by means of communication.

  Install a matching communication card in the multifunction extension port, and set H00.01 to 2. Then, you can start or stop the AC drive in communication mode. The following figure shows the setting method.

  Figure 4-8 Setting for start/stop using the communication control mode

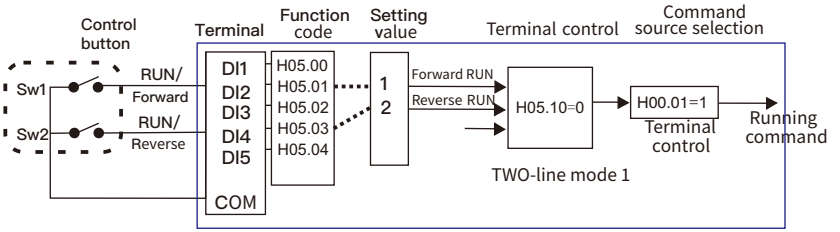

When H12.04 is set to a non-zero number, the function of automatic AC drive stop upon communication timeout is enabled. This prevents uncontrollable AC drive running due to faults of the communication cable or the host computer.

The communication port of the AC drive supports the Modbus-RTU protocol, and the communication is implemented only when the host computer supports the ModbusRTU master station protocol.

4.4.2 Start Mode

The HS930 supports three start modes, namely, direct start, rotational speed tracking restart, and pre-excited start (asynchronous motor), set in H01.00.

- H01.00 = 0 (direct start)

  It is applicable to small-inertia load. The frequency curve in this mode is shown in the following figure.

  DC braking before the start is applicable to drive of load such as elevator and crane. Startup frequency is applicable to drive with burst start under start torque, such as cement mixer.

  Figure 4-9 Frequency curve of direct start

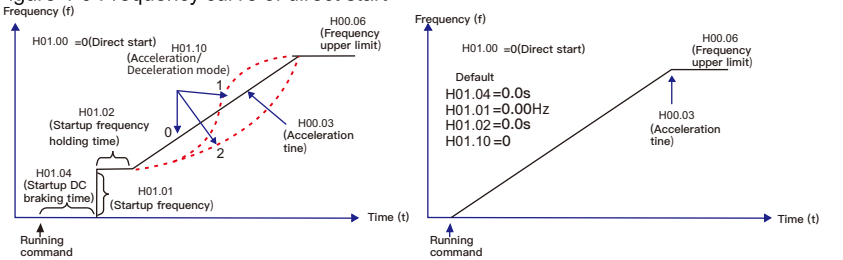

- H01.00 = 1 (Rotational speed tracking restart)

  It is applicable to large-inertia load. The frequency curve in this mode is shown in the following figure. If the load motor is still rotating due to the inertia when the AC drive starts, this mode is used to prevent start overcurrent.

  Figure 4-10 Frequency curve of rotational speed tracking restart

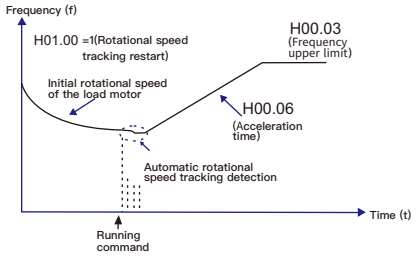

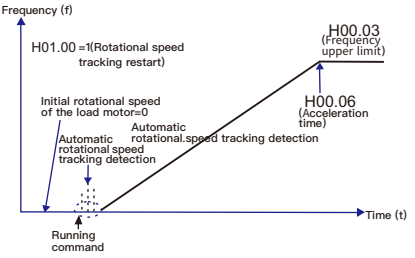

- H01.00 = 2 (Pre-excited start)

  It is applicable only to inductive asynchronous motor. The AC drive performs preexcitation before start, improving quick response of the motor and meeting the requirements of short acceleration time. The frequency curve in this mode is shown in the following figure.

  Figure 4-11 Frequency curve of pre-excited start

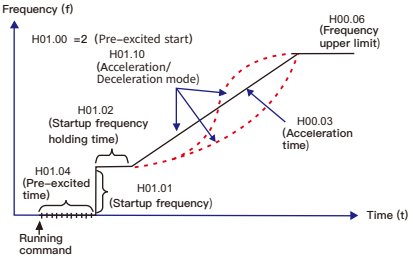

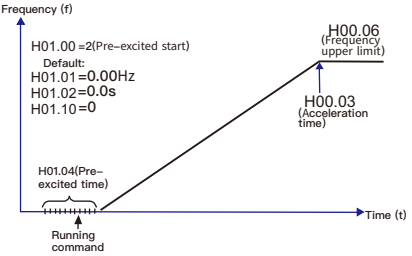

4.4.3 Stop Mode

The AC drive supports two stop modes, decelerate to stop and coast to stop, set in H01.05.

Figure 4-12 Diagram of two stop modes (decelerate to stop and coast to stop)

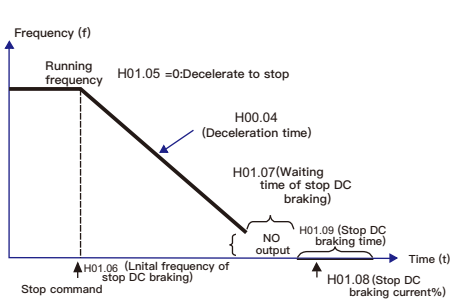

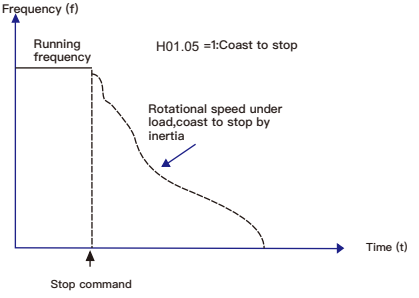

4.7.4 Timing Stop

The HS930 supports timing stop. This function is enabled by H08.42 and the timing duration is determined by H08.43 and H08.44.

Figure 4-13 Setting of the timing stop function

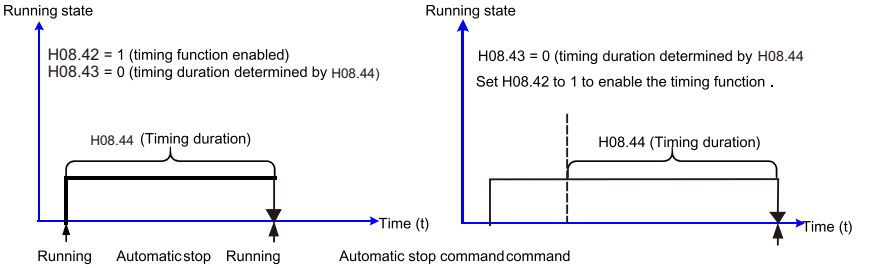

You can set the timing duration by means of analog input (such as potentiometer signal). For details, see the description of H08.43.

4.4.5 JOG Running

In certain applications, the AC drive needs to run in low speed temporarily to facilitate equipment test or other commissioning operations. In this case, you can set the AC drive to perform JOG running.

Figure 4-14 JOG running

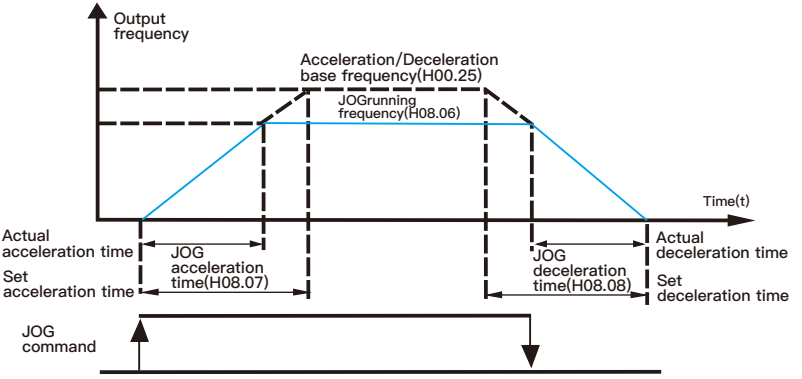

Parameter Setting and Operation of JOG Running in Operation Panel Control

Figure 4-15 JOG running in operation panel control

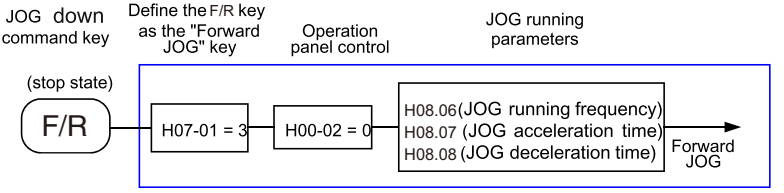

Set the parameters according to the preceding figure. In stop state of the AC drive, hold "F/R/QUICK/JOG", and the AC drive starts JOG running. After you release "F/R/QUICK/JOG", the AC drive decelerates to stop.

To perform reverse JOG, set H07.03 to 4 and H08.13 to 1. Hold down "F/R/QUICK/JOG" and the AC drive starts reverse JOG running.

Parameter Setting and Operation of JOG Running in DI Terminal Control

For equipment that requires frequent JOG operations, such as textile machine, it is more convenient to control JOG running by using keys or buttons. To achieve convenient control, perform the setting according to the following figure.

Figure 4-16 JOG running in DI terminal control

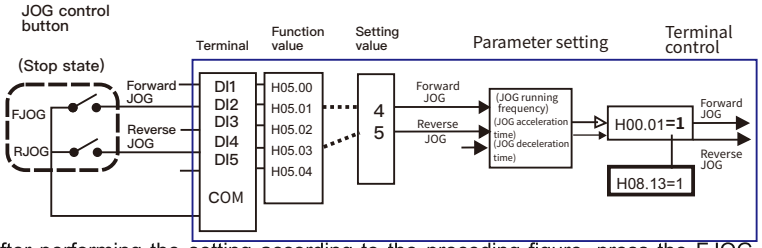

After performing the setting according to the preceding figure, press the FJOG button in stop state of the AC drive. Then, the AC drive starts forward JOG. After you press the FJOG button again, the AC drive decelerates to stop.

4.5 Setting the Running Frequency

The AC drive provides two frequency sources, namely, main frequency source X and auxiliary frequency source Y. You can select one frequency source and switch over between the two sources. You can also perform superposition on the two sources by setting the calculation formula to meet different control requirements of different scenarios.

4.5.1 Frequency Setting by the Main Frequency Source

There are nine setting modes of main frequency sources, digital setting (UP/DOWN modification, non-retentive at power failure), digital setting (UP/DOWN modification, retentive at power failure), AI1, AI2, AI3, pulse setting, multi-reference, simple PLC, and communication setting. You can select one in H00.02.

Figure 4-17 Frequency set by the main frequency source

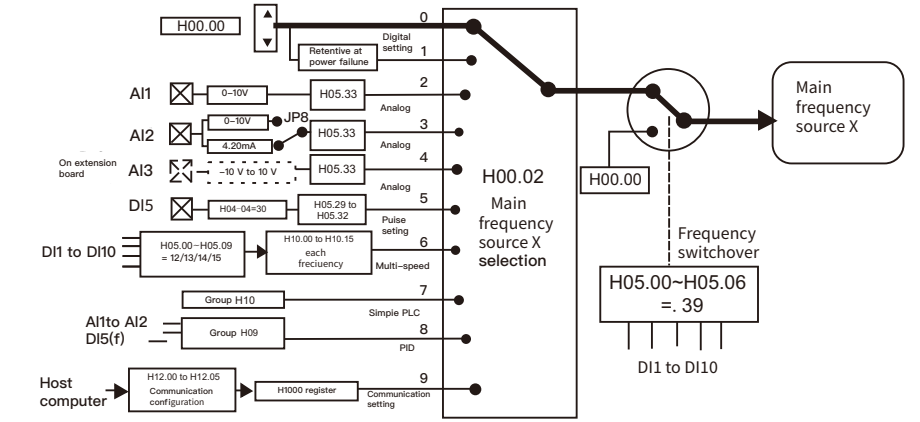

According to the preceding figure, the running frequency of the AC drive can be set by means of function codes, manual adjustment, analog input, multi-speed terminal, external feedback signal, internal PID regulator, or the host computer.

Set the corresponding function codes of each frequency setting mode, as shown in the preceding figure.

4.5.2 Frequency Setting by the Auxiliary Frequency Source

The frequency setting by the auxiliary frequency source is the same as the frequency setting by the main frequency source. You can set the auxiliary frequency source in H00.15.

Figure 4-18 Frequency set by the auxiliary frequency source

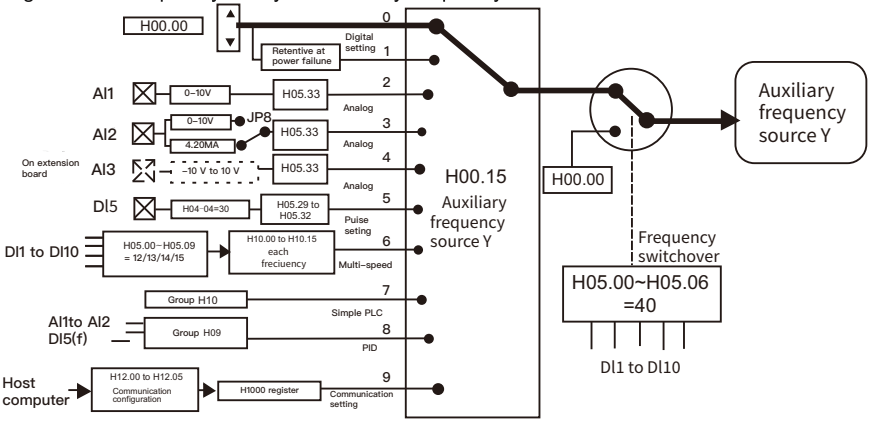

The relationship between the target running frequency and the main frequency source and auxiliary frequency source is set in H00.18, as follows:

1) Main frequency source X: The main frequency source is directly used to set the target running frequency.

2) Auxiliary frequency source Y: The auxiliary frequency source is directly used to set the target running frequency.

3) X and Y operation: There are four operation methods, namely, X+Y, X-Y, maximum of X and Y, and minimum of X and Y.

4) Frequency switchover: A DI terminal is used to switch over between the preceding three frequency setting channels.

The following figure shows how to set the relationship in H00.18, in which the bold line indicates the default setting.

Figure 4-19 Relationship between the target running frequency and main and auxiliary frequency sources

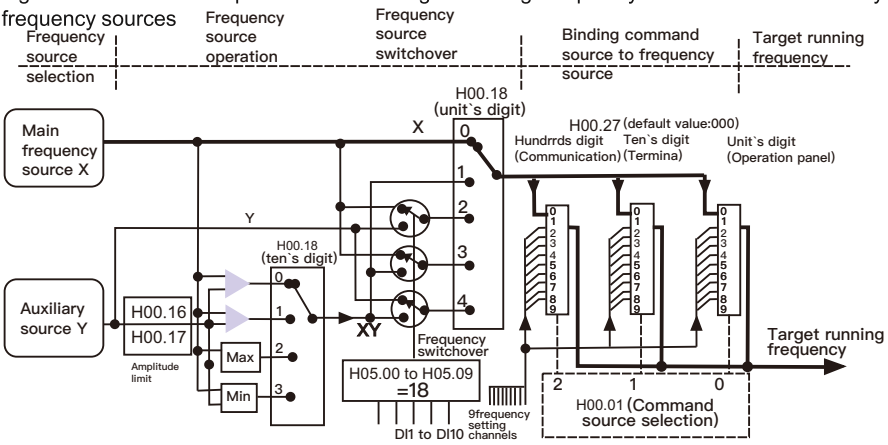

The operation between the main frequency source and the auxiliary frequency source can be used for closed-loop speed control. For example, using the main frequency source for setting the required frequency and the auxiliary frequency source for automatic adjustment, in conjunction with switchover performed by the external DI terminal signal, the required closed-loop control can be implemented.

4.5.3 Binding Command Source to Frequency Source

The three command sources can be separately bound to frequency sources, as shown in Figure 4-19. When the specified command source (H00.01) is bound to a frequency source (corresponding digit in the value of H00.27), the frequency is determined by the frequency setting channel set in H00.27. In this case, both main and auxiliary frequency sources are ineffective.

4.5.4 AI as the Frequency Source

The AI terminal can be used as the frequency source. The HS930 provides two AI terminals (AI1 and AI2) on the control board, and the optional I/O extension card provides another AI terminal (AI3).

The following figures show how to use the AI as the frequency source.

Figure 4-20 Voltage input of AI1 connected to the potentiometer as the frequency source (2-10 V corresponding to 10-40 Hz)

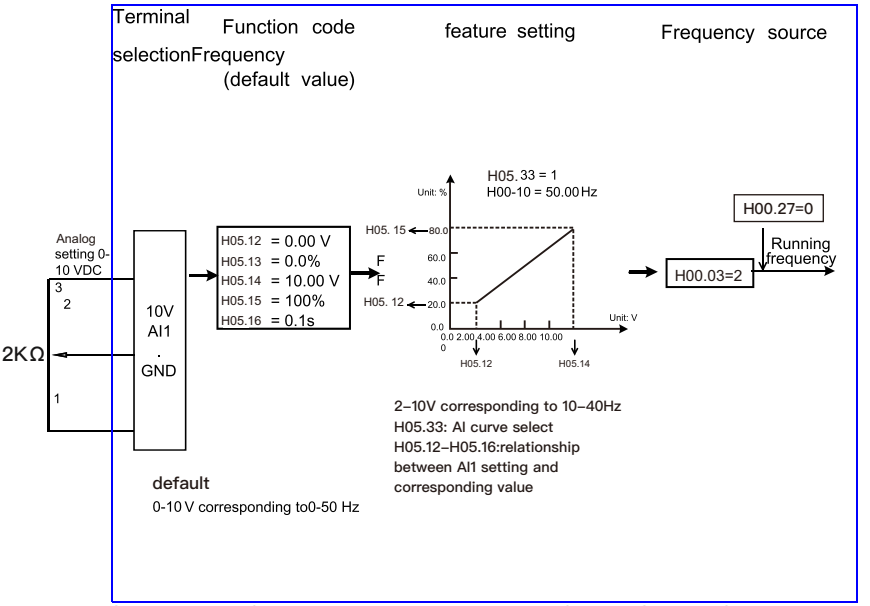

Figure 4-21 Current input of AI2 connected to 4DA module of the PLC as the frequency source (4-20 mA corresponding to 0-50 Hz)

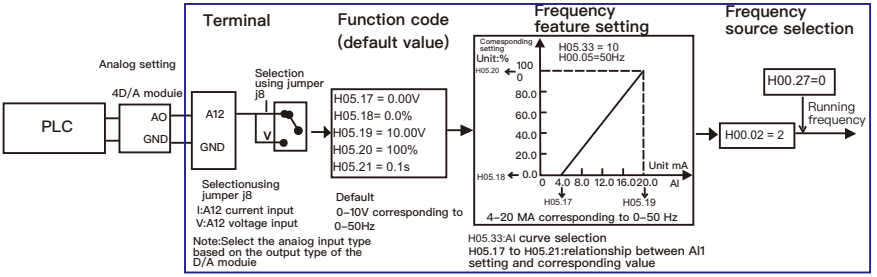

NOTE

1. HS930 provides two AI terminals (AI1 and AI2) on the control board, and the optional I/O extension card provides another AI terminal (AI3).

2. AI1 provides 0-10 V voltage input. AI2 provides 0-10 V voltage input or 4-20 mA current input, determined by jumper J3 on the control board. AI3 provides -10 V to +10 V bipolar voltage input.

3. When AI is used as the frequency source, 100% of the voltage or current input corresponding setting corresponds to the maximum frequency in H00.05.

4. When the temperature transmitter is used for analog setting, it must be connected to AI3 on the I/O extension card.

5. HS930 provides five corresponding relationship curves, which can be selected in H05.33. The input values and corresponding settings of each curve are set in H05.12 to H05.26 and group H23.

4.5.5 Pulse Setting as the Frequency Source

In many scenarios, pulse input is used as the frequency source. The specifications of pulse signals are: voltage 9V~30V, frequency 0~100KHz.

Only DI5 can be used for pulse input. The relationship between pulse input from DI5 and the corresponding setting is set in H05.27 to H05.30. The relationship is a two-point line, and 100% of pulse input corresponding setting corresponds to the maximum frequency of H00.05, as shown in Figure 4-22.

Figure 4-22 Pulse setting as the frequency source

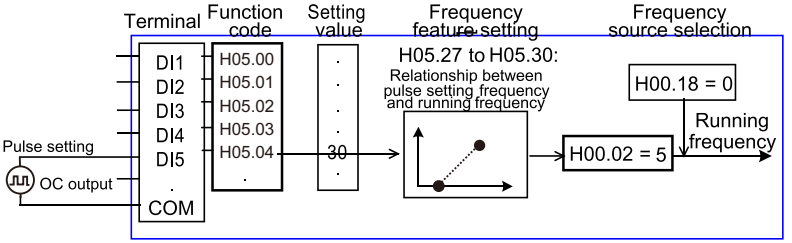

*Only DI5 can be used for pulse input.

4.5.6 Frequency Closed-Loop Control

The HS930has a built-in PID regulator. Together with the frequency sources, the PID regulator can implement automatic adjustment of progress control, such as constant temperature, constant pressure, and tension control.

Figure 4-23 Automatic adjustment by PID regulator

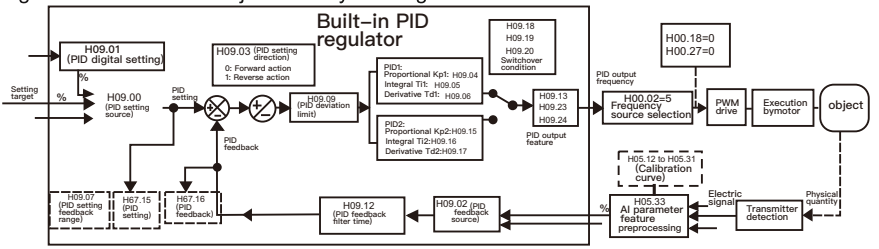

When PID frequency closed-loop control is implemented, H00.02 (Main frequency source X selection) must be set to 5 (PID). The PID-related parameters are set in group H09, as shown in Figure 4-23.

The HS930has two built-in equivalent PID calculating units. You can set the features, such as adjustment speed and accuracy, for the two units separately based on the actual conditions. Switchover between the two units can be implemented automatically or by means of an external DI terminal.

Figure 4-24 Swing function

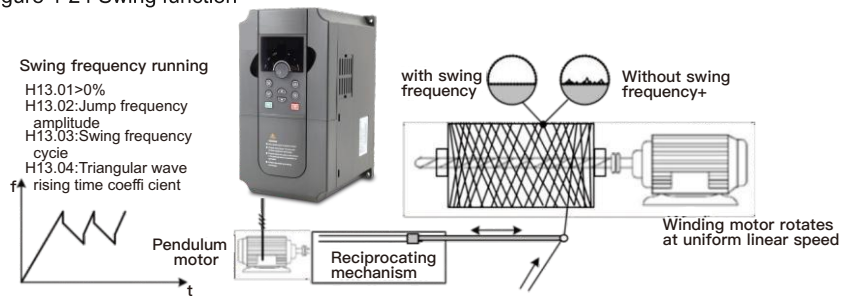

4.5.7 Multi-Speed Mode

In scenarios where the running frequency of the AC drive need not be adjusted continuously and only several frequencies are required, the multi-speed control can be used. The HS930 supports a maximum of 16 running frequencies, which are implemented by state combinations of four DI terminals. Set the function codes corresponding to DI terminals to a value among 12 to 15, and then the DI terminals are specified as the multi-frequency input terminals. The multiple frequencies are set based on the multi-frequency table in group H10. In addition, you need to set H00.02 (Main frequency source X selection) to 8 (Multireference). The following figure shows how to set the multi-speed function.

Figure 4-25 Setting the multi-speed function

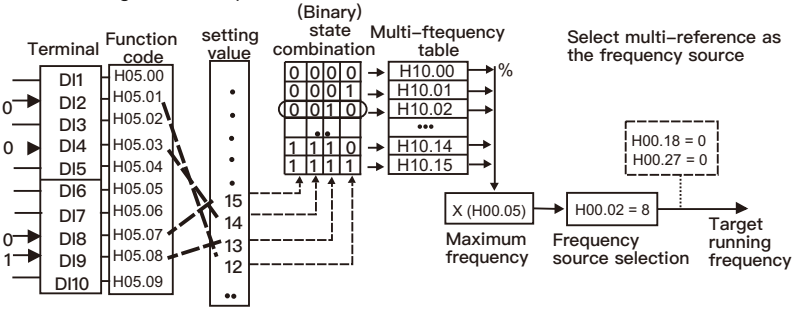

In the preceding figure, DI7, DI4, DI8, and DI2 are used as the multi-frequency input terminals, each of which has a bit value. The state combinations of these terminals correspond to multiple frequencies, When (DI7, DI4, DI8, DI2) = (0, 0, 1, 0), the state combination value is 2, corresponding to the value set in H10.02. The target running frequency is automatically calculated by H10.02 x H00.05.

The HS930supports a maximum of four DI terminals to be used as the multi-frequency input terminals. You can also use less than four DI terminals, and the empty bit is considered to be 0.

4.8.8 Setting the Motor Rotating Direction

After the AC drive restores the default settings, press "RUN" to drive the motor to rotate. In this case, the rotating direction is regarded as the forward rotation. If the rotating direction is

reverse to the direction required by the equipment, power off the AC drive and exchange any two of the output UVW cables (wait until the main capacitor of the AC drive is completely discharged).

In some applications where both forward rotation and reverse rotation are required, enable the reverse control (H08.13 = 0, default value) and meanwhile reverse the rotating direction

by setting H00.09 to 1. Then press "RUN" to make the motor rotate in the reverse direction, as shown in the following figure.

Figure 4-26 Reversing the motor rotating direction

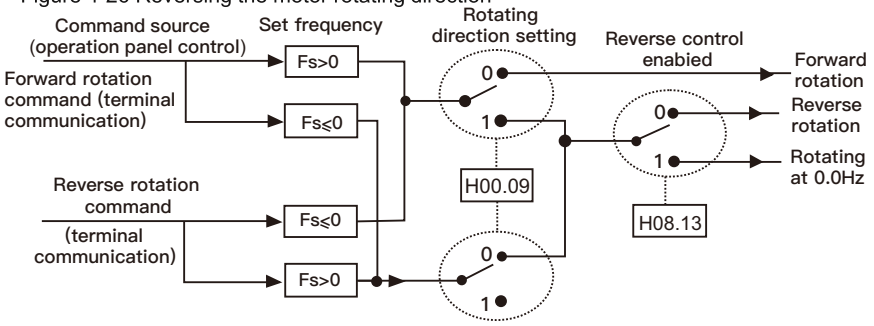

If the command source is terminal control and reverse rotation is required, use the default value 0 of H08.13 to enable reverse control.

According to the preceding figure, when the running frequency of the AC drive is set by means of communication (H00.02 = 9) and reverse control is enabled (H08.13 = 0), the AC drive instructs the reverse direction if the set frequency Fs is a negative value.

If the give running command is reverse rotation or the set frequency is a negative value, but reverse control is disabled (H08.13 = 1), the AC drive will run at 0 Hz and has no output.

In some applications where reverse rotation is prohibited, do not change the rotating direction by modifying the function codes because the function codes will be restored once the AC drive restores the default settings.

4.6 Setting and Auto-tuning of Motor Parameters

4.6.1 Motor Parameters to Be Set

When the AC drive runs in the vector control mode (H00.10 = 0 or 2), accurate motor parameters are required to ensure desired driver performance and running efficiency. This is extremely different from the V/F control (H00.10 =1).

Motor parameters (motor 1 by default) that need to be set are listed in the following table.

Table 4-2 Motor parameters to be set

Parameter	Description	Remark
H02.00	Motor type	Asynchronous motor, variablefrequency asynchronous motor, synchronous motor

H02.01 to H02.05	Rated motor power, Rated motor voltage, Rated motor current, Rated motor frequency, Rated motor rotational speed	Model parameters, manual input
H02.06 to H02-20	Motor internal equivalent stator resistance, inductive reactance and rotor inductance	Auto-tuning parameters
H02.27/28/34	Encoder parameters (these parameters need to be set in the vector control mode with sensor)	Encoder parameters

For complicated application system with multiple motors, the parameters of motors 2, 3, and 4 are listed in the following table.

Table 4-3 Motors 2, parameters to be set

Motor 2 Parameters	Description
H19.00	Asynchronous motor, variable-frequency asynchronous motor, synchronous motor
H19.01 to H19.05	Model parameters, manual input
H19.06 to H19-20	Auto-tuning parameters
H19.27, H19.28, H19.34	Encoder parameters

4.6.2 Motor Auto-tuning

To obtain the motor parameters, the AC drive can perform dynamic auto-tuning or static auto-tuning. For the asynchronous motor that cannot be disconnected from the load, you can input the motor parameters of the same model that was successfully auto-tuned before.

Auto-tuning	Application	Result
No-load dynamic auto-tuning	It is applied to applications where the motor (synchronous motor or asynchronous motor) can be disconnected from the load.	Best
With-load dynamic auto-tuning	It is applied to applications where the motor (synchronous motor or asynchronous motor) cannot be disconnected from the load.	OK
Static auto-tuning	It is applied to applications where the motor (asynchronous motor only) cannot be disconnected from the load and dynamic auto-tuning is not allowed.	Poor
Manual input	It is applied to applications where the motor (asynchronous motor only) cannot be disconnected from the load. Input the motor parameters of the same model that was successfully autotuned before into function codes H02.00 to H02.10.	OK

The following motor auto-tuning description takes motor 1 as an example. The auto-tuning of motor 2, 3, and 4 is the same and only the function codes are changed correspondingly.

The process of motor auto-tuning is as follows:

1) If the motor can be disconnected from the load, disconnect the motor from the load mechanically after power-off so that the motor can run without load.

2) After power-on, set H00.01 (Command source selection) to 0 (Operation panel control).

3) Input the motor nameplate parameters (such as H02.00 to H02.05) correctly and input the following parameters based on the actually selected motor.

Motor	Parameter
Motor 1	H02.00: Motor type selection H02.01: Rated motor power H02.02: Rated motor voltage H02.03: Rated motor current H02.04: Rated motor frequency H02.05: Rated motor rotational speed
Motor 2	H19.00 to H19.05, defined the same as H02.00 to H02.05

For asynchronous motor, set H02.37 (Auto-tuning selection) to 2 (Asynchronous motor complete auto-tuning). For motors 2, the corresponding function code is H19.37
Press on the operation panel. The operation panel displays:



Then press "RUN" on the operation panel. The AC drive will drive the motor to accelerate/decelerate and run in the forward/reverse direction, and the RUN indicator is ON. The autotuning lasts approximately 2 minutes. When the preceding display information disappears and the operation panel returns to the normal parameter display status, it indicates that the auto-tuning is complete.

The AC drive will automatically calculate the following motor parameters:

Motor	Parameter
Motor 1	H02.06: Stator resistance (asynchronous motor) H02.07: Rotor resistance (asynchronous motor) H02.08: Leakage inductive reactance (asynchronous motor) H02.09: Mutual inductive reactance (asynchronous motor) H02.10: No-load current (asynchronous motor)
Motor 2	H19.06 to H19.10, defined the same as H02.06 to H02.10

Motor 4	H21-06 to H21-10, defined the same as H02-06 to H02-10

If the motor cannot be disconnected from the load, set H02.37 (Auto-tuning selection) to 1 (Asynchronous motor static tuning) and then press "RUN" on the operation panel. The motor auto-tuning starts.

Note

In the synchronous motor system driven by HS930 and encoder for signal feedback is required. Therefore, you need to set the encoder parameters correctly before the auto-tuning. During the synchronous motor auto-tuning, the synchronous motor must rotate, and the best auto-tuning mode is no-load dynamic auto-tuning. If it is not allowed, you can perform with-load dynamic auto-tuning.

4.7 Use of DI Terminals

The control board provides five DI terminals DI1 to DI5. You can obtain another DI terminals DI6 to DI10 by installing an I/O extension card.

The internal hardware of DI terminals are configured with 24 VDC power supply for detection. You can input a signal to a DI terminal of the AC drive only by shorting the DI terminal and COM.

By default, H05.38 = 0000 and H05.39 = 0000. When a DI terminal is shorted to COM, it is active (logic 1). When a DI terminal is not shorted to COM, it is inactive (logic 0).

You can change the DI terminal active mode. That is, a DI terminal is inactive (logic 0) when being shorted with COM, and active (logic 1) when being not shorted to COM. In this case, it is necessary to change the corresponding bit in H05.38 and H05.39 (these two parameters respectively specifying the active mode setting of DI1 to DI5 and DI6 to DI10) to 1.

The AC drive also provides H05.11 (DI filter time) for the DI signal to improve the antiinterference level. For DI1 to DI3, the AC drive provides the DI signal delay function, convenient for some applications requiring delay.

Figure 4-31 DI delay setting

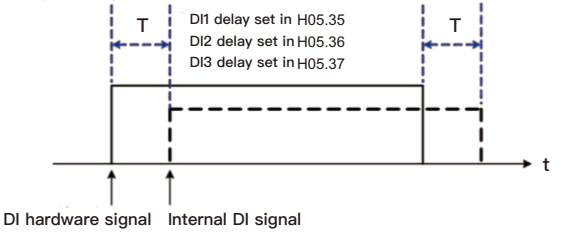

The preceding 10 DI terminals can be defined in function codes H05.00 to H05.09. Each DI can be allocated with their respective function from the 50 functions. For details, see descriptions of H05.00 to H05.09.

The hardware design allows only DI5 to receive high-speed pulse signal. If high-speed pulse count is required, use DI5.

4.8 Use of DO Terminals

The control board provides three DO terminals, namely FM, DO1 and TA/TB/TC. FM and DO1 are transistor outputs and can drive 24 VDC low-voltage circuit; TA/TB/TC is relay output, and can drive 250 VAC control circuit.

You can obtain another two terminals DO2 and PA/PB/PC by installing an I/O extension card. DO2 is transistor output and PA/PB/PC is relay output.

You can define the function of the DO terminals by setting H06.00 and H06.04 to indicate the running state and alarm information of the AC drive. There are a total of 40 functions. For details, see the descriptions of group H06.

Terminal	Corresponding Function Code	Output Feature Description
FM–COM	H06.06 when H06.05 = 0	Transistor, able to output high-speed pulses 10 Hz to 100 kHz; drive capacity: 24 VDC, 50 mA
	H06.00 when H06.05 = 1	Transistor; drive capacity: 24 VDC, 50 mA
TA-TB-TC	H06.01	Relay; drive capacity: 250 VAC, 3 A
PA-PB-PC	H06.02	Extension card, relay; drive capacity: 250 VAC, 3 A
DO1–COM	H06.03	Transistor; drive capacity: 24 VDC, 50 mA
DO2–COM	H06.04	Extension card, transistor; drive capacity: 24 VDC, 50 mA

When H06.05 = 0, the FM terminal is high-speed pulse output. The frequency of output pulses indicates the value of the internal running parameters. The greater the value is, the higher the output pulse frequency is. The 100% value corresponds to 100 kHz. The property of the indicated internal parameter is defined by H06.06.

4.9 Use of AI Terminals

The AC drive supports a total of three AI terminals, among which AI1 and AI2 are provided on the control board and AI3 is provided on the extension card.

Terminal	Input Signal Characteristic
AI1- GND	It receives the signal of 0–10V VDC.
AI2- GND	If J3 is connected to the position with "V" mark, it receives the signal of 0–10 VDC. If J3 is connected to the position with "I" mark, it receives the signal of 4–20 mA.
AI3- GND	It is provided on the extension card and receives the signal of -10 to +10 VDC.

As external voltage/current signal, AI is used for frequency source setting, torque setting, voltage setting at V/F separation, and PID setting or feedback. The corresponding relationship of the voltage or current and actual setting or feedback is defined by H05.12 to H05.26.

Figure 4-32 Defining corresponding relationship of the voltage or current and actual setting or

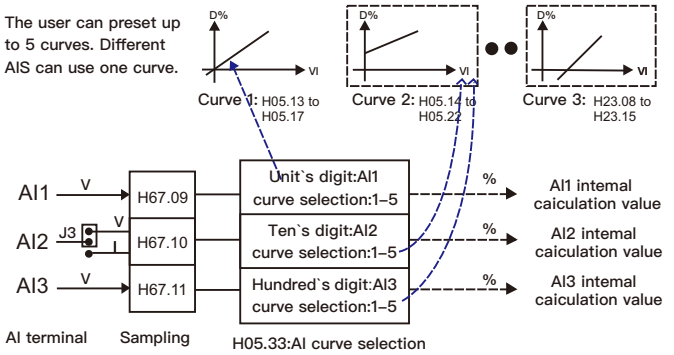

feedback

The sampling of AI terminals can be queried in H67.09 to H67.11. The calculation value is for internal subsequent calculation and cannot be directly read by the user.

4.10 Use of AO Terminals

The AC drive supports a total of two AO terminals, among which AO1 is provided by the control board and AO2 is provided on the extension card.

Terminal	Output Signal Characteristic
AO1-GND	If J4 is connected to the position with "V" mark, it outputs the signal of 0–10 VDC. If J4 is connected to the position with "I" mark, it outputs the signal of 0–20 mA.
AO2-GND	It is provided on the extension card and outputs the signal of 0–10 VDC.

AO1 and AO2 can be used to indicate the internal running parameters in the analog mode. The property of indicated parameters can be defined by H06.07 and H06.08.

The designated running parameters can be rectified before output. The rectification feature is Y = kX + b, among which "X" indicates the running parameters to be output, and "k" and "b" of AO1 can be set by H06.10 and H06.11.

Figure 4-33 Setting of "k" and "b" of AO1

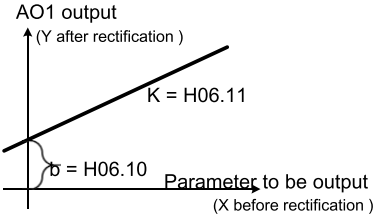

- For the UVW encoder, set H02.27 (Encoder pulses per revolution) and set H02.28 to 1 (UVW incremental encoder).
- For the resolver, set H02.28 to 2 (Resolver).
- For the open-collector encoder, set H02.27 (Encoder pulses per revolution) and set H02.28 to 0 (ABZ incremental encoder).
- For the wire-saving UVW encoder, set H02.27 (Encoder pulses per revolution) and set H02.28 to 4 (Wire-saving UVW encoder).

4.15 Use of Serial Communication

When communication mode RS485, Profibus-DP or CANopen are adopted, you need to install a corresponding extension card on the HS930 series AC drive, and set H16.01 correctly according to the used communication protocol type. CAN-link is enabled by default and you need not select it.

For the configuration of hardware communication parameters for the communication port, see group H12 Set the communication rate and data format to consistent with those of the host computer, which is the precondition of normal communication.

The HS930 serial port itself supports the Modbus RTU slave communication protocol. You can query or modify the AC drive's function codes, query various running state parameters, and send running command and running frequency to the AC drive from the host computer through the serial port.

Figure 4-34 Communication control mode of the AC drive

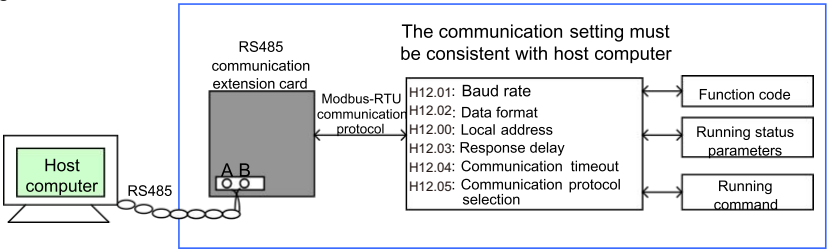

The HS930arranges the function codes, running state parameters and running commands in the "register parameter address" mode. The host computer can define the protocol of communication data interaction.

4.12 Password Setting

The AC drive provides the user password protection function. When H07.00 is set to a nonzero value, the value is the user password. The password takes effect after you after exit the function code editing state. When you press "PRG" again, "----" will be displayed, and you must enter the correct user password to enter the menu.

To cancel the password protection function, enter with password and set H07.00 to 0.

4.13 Parameter Saving and Default Setting Restoring

After a function code is modified on the operation panel, the modification will be saved in the register of the AC drive and remain effective at next power-on.

The AC drive supports backup and restoration of parameter setting, which is convenient for commissioning.

The AC drive also provides the retentive function on alarm information and accumulative running time.

You can restore the backup values or default settings of the function codes of the AC drive or clear the running data through H00.13. For details, see the description of H00.13.

Figure 4-35 Parameter saving and default parameter restoring

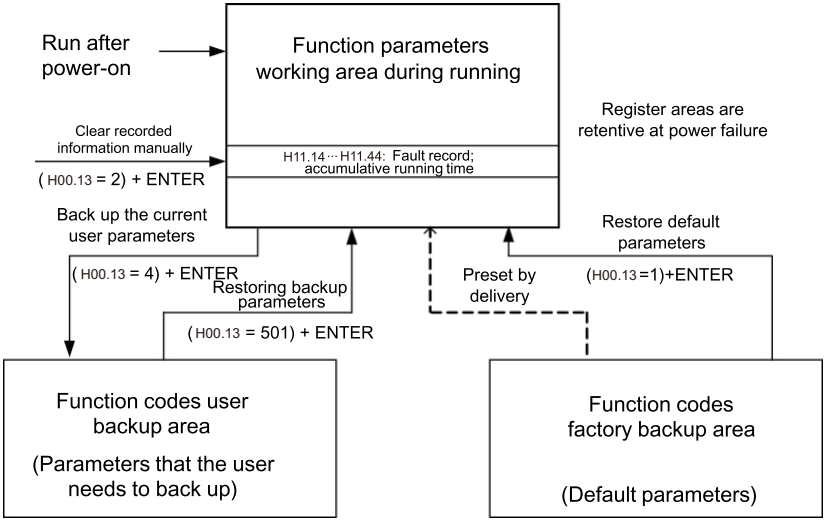

5

Function Code Table

Chapter 5 Function Code Table

If H07.00 is set to a non-zero number, parameter protection is enabled. You must enter the correct user password to enter the menu.

To cancel the password protection function, enter with password and set H07.00 to 0.

Group H00 to Group H32 are standard function parameters. Group H67 includes the monitoring function parameters.

The symbols in the function code table are described as follows:

"☆": The parameter can be modified when the AC drive is in either stop or running state.

"★": The parameter cannot be modified when the AC drive is in the running state.

"•": The parameter is the actually measured value and cannot be modified.

"*": The parameter is factory parameter and can be set only by the manufacturer.

5.1 Standard Function Parameters

Function Code	Parameter Name	Setting Range	Default	Property
Group H00: Standard Function Parameters				
H00.00	Preset frequency	0.00 to maximum frequency (valid when frequency source is digital setting)	50.00 Hz	☆
H00.01	Command source selection	0: Operation panel control (LED off) 1: Terminal control (LED on) 2: Communication control (LED blinking)	0	☆
H00.02	Main frequency source X selection	0: Digital setting (non-retentive at power failure) 1: Digital setting (retentive at power failure) 2: AI1 3: AI2 4: AI3 5: PID 6: Communication setting 7: Simple PLC 8: Multi-reference 9:Pulse setting (DI5)	0	★

Function Code	Parameter Name	Setting Range	Default	Property
H00.02	Main frequency source X selection	10: regulating frequency by encoder on the control panel(Stop reset) 11: regulating frequency by encoder on the control panel(Stop reset) 12: regulating frequency by encoder on the control panel(1Hzresolution)	0	★
H00.03	Acceleration time 1	0.00-650.00s (H00.19 = 2) 0.0-6500.0s (H00.19 = 1) 0-65000s (H00.19 = 0)	Model dependent	☆
H00.04	Deceleration time 1	0.00-650.00s (H00.19 = 2) 0.0-6500.0s (H00.19 = 1) 0-65000s (H00.19 = 0)	Model dependent	☆
H00.05	Maximum frequency	50.00-320.00 Hz	50.00 Hz	★
H00.06	Frequency upper limit	Frequency lower limit (H00.07) to maximum frequency (H00.05)	50.00 Hz	☆
H00.07	Frequency lower limit	0.00 Hz to frequency upper limit (H00.06)	0.00 Hz	☆
H00.08	Retentive of digital setting frequency upon power failure	0: Not retentive 1: Retentive	0	☆
H00.09	Rotation direction	0: Same direction 1: Reverse direction	0	☆
H00.10	Motor 1 control mode	0: Sensorless flux vector control (SFVC) 1: Voltage/Frequency (V/F) control 2: Closed-loop vector control (CLVC)	0	★
H00.11	Carrier frequency	0.5-16.0 kHz	Model dependent	☆
H00.12	Carrier frequency adjustment with temperature	0: No 1: Yes	1	☆
H00.13	Restore default settings	0: No operation 01: Restore factory settings except motor parameters 02: Clear records 04: Restore user backup parameters	0	★

Function Code	Parameter Name	Setting Range	Default	Property
H00.14	G/P type display	1: G type (constant torque load) 2: P type (variable torque load e.g. fan and pump)	Model dependent	●
H00.15	Auxiliary frequency source Y selection	The same as H00.02 (Main frequency source X selection)	0	★
H00.16	Range of auxiliary frequency Y for X and Y operation	0: Relative to maximum frequency 1: Relative to main frequency X	0	☆
H00.17	Range of auxiliary frequency Y for X and Y operation	0%-150%	100%	☆
H00.18	Frequency source selection	Unit's digit (Frequency source selection) 0: Main frequency source X 1: X and Y operation (operation relationship determined by ten's digit) 2: Switchover between X and Y 3: Switchover between X and "X and Y operation" 4: Switchover between Y and "X and Y operation" Ten's digit (X and Y operation relationship) 0: X+Y 1: X-Y 2: Maximum 3: Minimum	00	☆
H00.19	Acceleration/Deceleration time unit	0:1s 1: 0.1s 2: 0.01s	1	★
H00.21	Frequency offset of auxiliary frequency source for X and Y operation	0.00 Hz to maximum frequency (H00.05)	0.00 Hz	☆
H00.22	Frequency reference resolution	1: 0.1 Hz 2: 0.01 Hz	2	★
H00.23	Frequency upper limit offset	0.00 Hz to maximum frequency (H00.05)	0.00 Hz	☆

Function Code	Parameter Name	Setting Range	Default	Property
H00.24	Motor parameter group selection	0: Motor parameter group 1 1: Motor parameter group 2	0	★
H00.25	Acceleration/Deceleration time base frequency	0: Maximum frequency (H00.05) 1: Set frequency 2: 100 Hz	0	★
H00.26	Base frequency for UP/ DOWN modification during running	0: Running frequency 1: Set frequency	0	★
H00.27	Binding command source to frequency source	Unit's digit (Binding operation panel command to frequency source) 0: No binding 1: Frequency source by digital setting 2: AI1 3: AI2 4: AI3 5: Pulse setting (DI5) 6: Multi-reference 7: Simple PLC 8: PID 9: Communication setting Ten's digit (Binding terminal command to frequency source) 0-9, same as unit's digit Hundred's digit (Binding communication command to frequency source) 0-9, same as unit's digit	000	☆
H00.28	Source of frequency upper limit	0: Set by H00.06 1: AI1 2: AI2 3: AI3 4: Pulse setting (DI5) 5: Communication setting		★

Function Code	Parameter Name	Setting Range	Default	Property
Group H01: Start/Stop Control				
H01.00	Start mode	0: Direct start 1: Rotational speed tracking restart 2: Pre-excited start (asynchronous motor)	0	☆
H01.01	Startup frequency	0.00-10.00 Hz	0.00 Hz	☆
H01.02	Startup frequency holding time	0.0-100.0s	0.0s	★
H01.03	Startup DC braking current/ Pre-excited current	0%-100%	0%	★
H01.04	Startup DC braking time/ Pre-excited time	0.0-100.0s	0.0s	★
H01.05	Stop mode	0: Decelerate to stop 1: Coast to stop	0	☆
H01.06	Initial frequency of stop DC braking	0.00 Hz to maximum frequency	0.00 Hz	☆
H01.07	Waiting time of stop DC braking	0.0-100.0s	0.0s	☆
H01.08	Stop DC braking current	0%-100%	0%	☆
H01.09	Stop DC braking time	0.0-100.0s	0.0s	☆
H01.10	Acceleration/Deceleration mode	0: Linear acceleration/deceleration 1: S-curve acceleration/ deceleration A 2: S-curve acceleration/ deceleration B	0	★
H01.11	Time proportion of S-curve start segment	0.0% to (100.0% - H01.12)	30.0%	★
H01.12	Time proportion of S-curve end segment	0.0% to (100.0% - H01.11)	30.0%	★

Function Code	Parameter Name	Setting Range	Default	Property
H01.13	Brake use ratio	0%-100%	100%	☆
H01.14	Rotational speed tracking mode	0: From frequency at stop 1: From zero speed 2: From maximum frequency	0	★
H01.15	Rotational speed tracking speed	1-100	20	☆
GroupH02: Motor1 Parameters				
H02.00	Motor type selection	0: Common asynchronous motor 1: Variable frequency asynchronous motor 2: Permanent magnetic synchronous motor	1	★
H02.01	Rated motor power	0.1-1000.0 kW	Model dependent	★
H02.02	Rated motor voltage	1-2000 V	Model dependent	★
H02.03	Rated motor current	0.01-655.35A(AC drive power > 55KW) 0.1-6553.5 A (AC drive power > 55 kW)	Model dependent	★
H02.04	Rated motor frequency	0.01 Hz to maximum frequency	Model dependent	★
H02.05	Rated motor rotational speed	1-65535 RPM	Model dependent	★
H02.06	Stator resistance (asynchronous motor)	0.001-65.535 Ω (AC drive power ≤55 kW) 0.0001-6.5535 Ω (AC drive power > 55 kW)	Model dependent	★
H02.07	Rotor resistance (asynchronous motor)	0.001-65.535 Ω (AC drive power ≤55 kW) 0.0001-6.5535 Ω (AC drive power > 55 kW)	Model dependent	★
H02.08	Leakage inductive reactance (asynchronous motor)	0.01-655.35 mH (AC drive power ≤55 kW) 0.001-65.535 mH (AC drive power > 55 kW)	Model dependent	★
H02.09	Mutual inductive reactance (asynchronous motor)	0.1-6553.5 mH (AC drive power ≤55 kW) 0.01--655.35 mH (AC drive power > 55 kW)	Model dependent	★

Function Code	Parameter Name	Setting Range	Default	Property
H02.10	No-load current (asynchronous motor)	0.01 to H02.03 (AC drive power ≤55 kW) 0.1 to H02.03 (AC drive power > 55 kW)	Model dependent	★
H02.27	Encoder pulses per revolution	1-65535	2500	★
H02.28	Encoder type	0: ABZ incremental encoder 1: UVW incremental encoder 2: Resolver 3: SIN/COS encoder 4: Wire-saving UVW encoder	0	★
H02.30	A/B phase sequence of ABZincremental encoder	0: Forward 1: Reserve	0	★
H02.31	Encoder installation angle	0.0–359.9°	0.0°	★
H02.32	U, V, W phase sequence of UVW encoder	0: Forward 1: Reverse	0	★
H02.33	UVW encoder angle offset	0.0–359.9°	0.0°	★
H02.34	Number of pole pairs of resolver	1-65535	1	★
H02.37	Auto-tuning selection	0: No auto-tuning 1: Asynchronous motor static auto-tuning 2: Asynchronous moctor complete auto-tuning 11: Synchronous motor with-load auto-tuning 12: Synchronous motor no-load auto-tuning	0	★

Function Code	Parameter Name	Setting Range	Default	Property
Group H03: Vector Control Parameters				
H03.00	Speed loop proportional gain 1	0-100	30	☆
H03.01	Speed loop integral time 1	0.01-10.00s	1.00s	☆
H03.02	Switchover frequency 1	0.00 to H03.05	5.00 Hz	☆
H03.03	Speed loop proportional gain 2	0-100	20	☆
H03.04	Speed loop integral time 2	0.01-10.00s	1.00s	☆
H03.05	Switchover frequency 2	H03.02 to maximum output frequency	10.00 Hz	☆
H03.06	Vector control slip gain	50%-200%	100%	☆
H03.09	Torque upper limit source in speed control mode	0: H03.10 1: AI1 2: AI2 3: AI3 4: Pulse setting (DI5) 5: Communication setting 6: MIN(AI1.AI2) 7: MAX(AI1.AI2)	0	☆
H03.10	Digital setting of torque upper limit in speed control mode	0.0%-200.0%	150.0%	☆
H03.13	Excitation adjustment proportional gain	0-60000	2000	☆
H03.14	Excitation adjustment integral gain	0-60000	1300	☆
H03.15	Torque adjustment proportional gain	0-60000	2000	☆
H03.16	Torque adjustment integral gain	0-60000	1300	☆
H03.17	Speed loop integral property	Unit's digit: integral separation 0: Disabled 1: Enabled	0	☆

Function Code	Parameter Name	Setting Range	Default	Property
Group H04: V/F Control Parameters				
H04.00	V/F curve setting	0: Linear V/F 1: Multi-point V/F 2: Square V/F 3: 1.2-power V/F 4: 1.4-power V/F 6: 1.6-power V/F 8: 1.8-power V/F 9: Reserved 10: V/F complete separation 11: V/F half separation	0	★
H04.01	Torque boost	0.0% (fixed torque boost) 0.1% - 30.0%	Model dependent	☆
H04.02	Cut-off frequency of torque boost	0.00 Hz to maximum output frequency	50.00 Hz	★
H04.03	V/F slip compensation gain	0%-200.0%	0.0%	☆
H04.04	V/F over-excitation gain	0-200	64	☆
H04.05	Multi-point V/F frequency 1 (F1)	0.00 Hz to H04.07	0.00 Hz	★
H04.06	Multi-point V/F voltage 1 (V1)	0.0%-100.0%	0.0%	★

Function Code	Parameter Name	Setting Range	Default	Property
H04.07	Multi-point V/F frequency 2 (F2)	H04.05 to H04.09	0.00 Hz	★
H04.08	Multi-point V/F voltage 2 (V2)	0.0%-100.0%	0.0%	★
H04.09	Multi-point V/F frequency 3 (F3)	H04.07 to rated motor frequency (H02.04) Note: The rated frequencies of motors 2, 3, and 4 are respectively set in H19.04, H20- 04, and H21-04.	0.00 Hz	★
H04.10	Multi-point V/F voltage 3 (V3)	0.0%-100.0%	0.0%	★
H04.11	V/F oscillation suppression gain	0-100	Model dependent	☆
H04.13	Voltage source for V/F separation	0: Digital setting (H04.14) 1: AI1 2: AI2 3: AI3 4: Pulse setting (DI5) 5: Multi-reference 6: Simple PLC 7: PID 8: Communication setting 100.0% corresponds to the rated motor voltage (H02.02, H21- 02, H23.02).	0	☆
H04.14	Voltage digital setting for V/F separation	0 V to rated motor voltage	0 V	☆
H04.15	Voltage rise time of V/F separation	0.0-1000.0s It indicates the time for the voltage rising from 0 V to rated motor voltage.	0.0s	☆

Function Code	Parameter Name	Setting Range	Default	Property
Group H05: Input Terminals				
H05.00	DI1 function selection	0: No function 1: Forward RUN (FWD) 2: Reverse RUN (REV) 3: Three-line control 4: Forward JOG (FJOG) 5: Reverse JOG (RJOG) 6: Coast to stop 7: Fault reset (RESET) 8: Normally open (NO) input of external fault 9: Terminal UP 10:Terminal DOWN 11: UP and DOWN setting clear (terminal, operation panel) 12: Multi-reference terminal 1 13: Multi-reference terminal 2 14: Multi-reference terminal 3 15: Multi-reference terminal 4 16: PID pause 17: Swing pause 18:RUN pause 19:Acceleration/Deceleration prohibited 20: Torque control prohibited 21: Command source switchover terminal 1 22: Terminal 1 for acceleration/ deceleration time selection 23: Terminal 2 for acceleration/ deceleration time selection 24: PLC status reset 25: Counter input 26: Length count input 27: Counter reset 28: Length reset 29: Frequency source switchover	1	★
H05.01	DI2 function selection		4	★
H05.02	DI3 function selection		9	★
H05.03	DI4 function selection		12	★
H05.04	DI5 function selection		13	★

Function Code	Parameter Name	Setting Range	Default	Property
H05.05	DI6 function selection	30: Pulse input (enabled only for DI5) 31:Reserved 32: Immediate DC braking 33: Normally closed (NC) input of external fault 34: Frequency modification forbidden 35: Reverse PID action direction 36: External STOP terminal 1 37: Command source switchover terminal 2 38: PID integral pause 39: Switchover between main frequency source X and preset frequency 40: Switchover between auxiliary frequency source Y and preset frequency 41: Motor selection terminal 1 42: Motor selection terminal 2 43: PID parameter switchover 44: User-defined fault 1 45: User-defined fault 2 46: Speed control/Torque control switchover 47: Emergency stop 48: External STOP terminal 2 49: Deceleration DC braking 50: Clear the current running time 51: Switchover between two-line mode and three-line mode 52–59: Reserved	0	★
H05.06	DI7 function selection		0	★
H05.07	DI8 function selection		0	★
H05.08	DI9 function selection		0	★
H05.09	DI10 function selection		0	★
H05.10	Terminal command mode	0: Two-line mode 1 1: Two-line mode 2 2: Three-line mode 1 3: Three-line mode 2	0	★
H05.11	DI filter time	0.000–1.000s	0.010s	☆
H05.12	AI curve 1 minimum input	0.00 V to H05.14	0.00 V	☆

Function Code	Parameter Name	Setting Range	Default	Property
H05.13	Corresponding setting of AI curve 1 minimum input	-100.00%-100.0%	0.0%	☆
H05.14	AI curve 1 maximum input	H05.12 to 10.00 V	10.00 V	☆
H05.15	Corresponding setting of AI curve 1 maximum input	-100.00%-100.0%	100.0%	☆
H05.16	AI1 filter time	0.00-10.00s	0.10s	☆
H05.17	AI curve 2 minimum input	0.00 V to H05.19	0.00 V	☆
H05.18	Corresponding setting of AI curve 2 minimum input	-100.00%-100.0%	0.0%	☆
H05.19	AI curve 2 maximum input	H05.17 to 10.00 V	10.00 V	☆
H05.20	Corresponding setting of AI curve 2 maximum input	-100.00%-100.0%	100.0%	☆
H05.21	AI2 filter time	0.00-10.00s	0.10s	☆
H05.22	AI curve 3 minimum input	0.00 V to H05.24	0.00 V	☆
H05.23	Corresponding setting of AI curve 3 minimum input	-100.00%-100.0%	0.0%	☆
H05.24	AI curve 3 maximum input	H05.22 to 10.00 V	10.00 V	☆
H05.25	Corresponding setting of AI curve 3 maximum input	-100.00%-100.0%	100.0%	☆
H05.26	AI3 filter time	0.00-10.00s	0.10s	☆
H05.27	Pulse minimum input	0.00 kHz to H05.29	0.00 kHz	☆
H05.28	Corresponding setting of pulse minimum input	-100.00%-100.0%	0.0%	☆
H05.29	Pulse maximum input	H05.27 to 50.00 kHz	50.00 kHz	☆
H05.30	Corresponding setting of pulse maximum input	-100.00%-100.0%	100.0%	☆
H05.31	Pulse filter time	0.00-10.00s	0.10s	☆
H05.32	Terminal UP/DOWN rate	0.01-65.535 Hz/s	1.00 Hz/s	☆

Function Code	Parameter Name	Setting Range	Default	Property
H05.33	AI curve selection	Unit's digit (AI1 curve selection) Curve 1 (2 points, see H05.12 to H05.15) Curve 2 (2 points, see H05.17 to H05.20) Curve 3 (2 points, see H05.22 to H05.25) Curve 4 (4 points, see H23.00 to H23.07) Curve 5 (4 points, see H23.08 to H23.15) Ten's digit (AI2 curve selection) Curve 1 to curve 5 (same as AI1) Hundred's digit (AI3 curve selection) Curve 1 to curve 5 (same as AI1)	321	☆
H05.34	Setting for AI less than minimum input	Unit's digit (Setting for AI1 less than minimum input) 0: Minimum value 1: 0.0% Ten's digit (Setting for AI2 less than minimum input) 0, 1 (same as AI1) Hundred's digit (Setting for AI3 less than minimum input) 0, 1 (same as AI1)	000	☆
H05.35	DI1 delay time	0.0-3600.0s	0.0s	★
H05-36	DI2 delay time	0.0-3600.0s	0.0s	★
H05-37	DI3 delay time	0.0-3600.0s	0.0s	★
H05.38	DI valid mode selection 1	Unit's digit (DI1 valid mode) 0: High level valid 1: Low level valid Ten's digit (DI2 valid mode) 0, 1 (same as DI1) Hundred's digit (DI3 valid mode) 0, 1 (same as DI1)	00000	★

Function Code	Parameter Name	Setting Range	Default	Property
H05.38	DI valid mode selection 1	Thousand's digit (DI4 valid mode)	00000	★
		0, 1 (same as DI1)		
		Ten thousand's digit (DI5 valid mode)		
		0, 1 (same as DI1)		
H05.39	DI valid mode selection 2	Unit's digit (DI6 valid mode)	00000	★
		0, 1 (same as DI1)		
		Ten's digit (DI7 valid mode)		
		0, 1 (same as DI1)		
		Hundred's digit (DI8 state)		
		0, 1 (same as DI1)		
		Thousand's digit (DI9 valid mode)		
		0, 1 (same as DI1)		
		Ten thousand's digit (DI10 valid mode)		
		0, 1 (same as DI1)		

Function Code	Parameter Name	Setting Range	Default	Property
Group H06: Output Terminals				
H06.00	FMR function (opencollector output terminal)	0: No output 1: AC drive running 2:AC drive overload pre-warning 3: Fault output (stop) 4: Freq uency-level detection FDT1 output 5: Frequency reached 6: Zero-speed running (no output at stop) 7: Frequency upper limit reached 8: Frequency lower limit reached (no output at stop) 9: Motor overload pre-warning 10: Frequency limited 11: Torque limited 12: PLC cycle complete 13: Set count value reached 14: Designated count value reached 15: Length reached 16: Accumulative running time reached 17: Ready for RUN 18: AI1 larger than AI2	2	☆
H06.01	Relay function (T/A-T/B-T/C)		2	☆
H06.02	Extension card relay function (P/A-P/B-P/C)		0	☆

Function Code	Parameter Name	Setting Range	Default	Property
H06.03	DO1 function selection (open-collector output terminal)	19: Undervoltage state output 20: Communication setting 21: Reserved 22: Reserved 23: Zero-speed running 2 (having output at stop)	1	☆
H06.04	Extension card DO2 function	24: Accumulative power-on time reached 25: Frequency level detection FDT2 output 26: Frequency 1 reached 27: Frequency 2 reached 28: Current 1 reached 29: Current 2 reached 30: Timing reached 31: AI1 input limit exceeded 32: Load becoming 0 33: Reverse running 34: Zero current state 35: Module temperature reached 36: Software current limit exceeded 37: Frequency lower limit reached (having output at stop) 38: Alarm output 39: Motor overheat warning 40: Current running time reached 41: Fault output (There is no output if it is the coast to stop fault and undervoltage occurs.)	4	☆
H06.05	FM terminal output mode	0: Pulse output (FMP) 1: Switch signal output (FMR)	0	☆
H06.06	FMP function selection	0: Running frequency 1: Set frequency	0	☆
H06.07	AO1 function selection		0	☆

Function Code	Parameter Name	Setting Range	Default	Property
H06.08	AO2 function selection	2: Output current 3: Output torque (absolute value) 4: Output power 5: Output voltage 6: Pulse input 7: AI1 8: AI2 9: AI3 10: Length 11: Count value 12: Communication setting 13: Motor rotational speed 14: Output current 15: Output voltage 16: Output torque (actual value)	1	☆
H06.09	Maximum FMP output frequency	0.01- 100.00 kHz	50.00 kHz	☆
H06.10	AO1 offset coefficient	-100.0%-100.0%	0.0%	☆
H06.11	AO1 gain	-10.00-10.00	1.00	☆
H06.12	AO2 offset coefficient	-100.0%-100.0%	0.00%	☆
H06.13	AO2 gain	-10.00-10.00	1.00	☆
H06.17	FMR output delay time	0.0-3600.0s	0.0s	☆
H06.18	Relay 1 output delay time	0.0-3600.0s	0.0s	☆
H06.19	Relay 2 output delay time	0.0-3600.0s	0.0s	☆
H06.20	DO1 output delay time	0.0-3600.0s	0.0s	☆
H06.21	DO2 output delay time	0.0-3600.0s	0.0s	☆
H06.22	DO valid mode selection	Unit's digit (FMR valid mode) 0: Positive logic 1: Negative logic Ten's digit (Relay 1 valid mode) 0, 1 (same as FMR) Hundred's digit (Relay 2 valid mode)	00000	☆

		0, 1 (same as FMR)		
		Thousand's digit (DO1 valid mode)		
		0, 1 (same as FMR)		
		Ten thousand's digit (DO2 valid mode)		
		0, 1 (same as FMR)		
Group H07: Operation Panel and Display				
H07.00	User password	0-65535	0	☆
H07.03	F/R Key function selection	0: F/R key disabled 1: Switchover between operation panel control and remote command control (terminal or communication) 2: Switchover between forward rotation and reverse rotation 3: Forward JOG 4: Reverse JOG	0	★
H07.04	STOP/RESET key function	0: STOP/RESET key enabled only in operation panel control 1: STOP/RESET key enabled in any operation mode	1	☆
H07.05	LED display running parameters 1	0000-FFFF Bit00: Running frequency 1 (Hz) Bit01: Set frequency (Hz) Bit02: Bus voltage (V) Bit03: Output voltage (V) Bit04: Output current (A) Bit05: Output power (kW) Bit06: Output torque (%) Bit07: DI input status Bit08: DO output status Bit09: AI1 voltage (V) Bit10: AI2 voltage (V) Bit11: AI3 voltage (V) Bit12: Count value Bit13: Length value Bit14: Load speed display Bit15: PID setting	1F	☆

Function Code	Parameter Name	Setting Range	Default	Property
H07.06	LED display running parameters 2	0000-FFFF Bit00: PID feedback Bit01: PLC stage Bit02: Pulse setting frequency(kHz) Bit03: Running frequency 2 (Hz) Bit04: Remaining running time Bit05: AI1 voltage before correction (V) Bit06: AI2 voltage before correction (V) Bit07: AI3 voltage before correction (V) Bit08: Linear speed Bit09: Current power-on time (Hour) Bit10: Current running time (Min) Bit11: Pulse setting frequency (Hz) Bit12: Communication setting value Bit13: Encoder feedback speed (Hz) Bit14: Main frequency X display (Hz) Bit15: Auxiliary frequency Y display (Hz)	0	☆
H07.07	LED display stop parameters	0000-FFFF Bit00: Set frequency (Hz) Bit01: Bus voltage (V) Bit02: DI input status Bit03: DO output status Bit04: AI1 voltage (V) Bit05: AI2 voltage (V)	33	☆

	Parameter Name	Setting Range	Default	Property
H07.07	LED display stop parameters	Bit06: AI3 voltage (V) Bit07: Count value Bit08: Length value Bit09: PLC stage Bit10: Load speed Bit11: PID setting Bit12: Pulse setting frequency (kHz)	33	☆
H07.08	Heatsink temperature of inverter module	0.0–100.0℃	-	●
H07.09	Product number	-	-	●
H07.10	Load speed display coefficient	0.0001-6.5000	1.0000	☆
H07.11	Accumulative running time	0-65535 h	-	●
H07.12	Number of decimal places for load speed display	0: 0 decimal place 1: 1 decimal place 2: 2 decimal places 3: 3 decimal places	1	☆
H07.13	Accumulative power-on time	0-65535 h	0 h	●
H07.14	Accumulative power consumption	0-65535 kWh	-	●
Group H08: Auxiliary Functions				
H08.00	Acceleration time 2	0.0-6500.0s	Model dependent	☆
H08.01	Deceleration time 2	0.0-6500.0s	Model dependent	☆
H08.02	Acceleration time 3	0.0-6500.0s	Model dependent	☆
H08.03	Deceleration time 3	0.0-6500.0s	Model dependent	☆
H08.04	Acceleration time 4	0.0-500.0s	Model dependent	☆

Function Code	Parameter Name	Setting Range	Default	Property
H08.05	Deceleration time 4	0.0-6500.0s	Model dependent	☆
H08.06	JOG running frequency	0.00 Hz to maximum frequency	2.00 Hz	☆
H08.07	JOG acceleration time	0.0-6500.0s	20.0s	☆
H08.08	JOG deceleration time	0.0-6500.0s	20.0s	☆
H08.09	Jump frequency 1	0.00 Hz to maximum frequency	0.00 Hz	☆
H08.10	Jump frequency 2	0.00 Hz to maximum frequency	0.00 Hz	☆
H08.11	Frequency jump amplitude	0.00 Hz to maximum frequency	0.00 Hz	☆
H08.12	Forward/Reverse rotation dead-zone time	0.0-3000.0s	0.0s	☆
H08.13	Reverse control	0: Enabled 1: Disabled	0	☆
H08.14	Running mode when set frequency lower than frequency lower limit	0: Run at frequency lower limit 1: Stop 2: Run at zero speed	0	☆
H08.15	Droop control	0.00-10.00 Hz	0.00 Hz	☆
H08.16	Accumulative power-on time threshold	0-65000 h	0 h	☆
H08.17	Accumulative running time threshold	0-65000 h	0 h	☆
H08.18	Startup protection	0: No 1: Yes	0	☆
H08.19	Frequency detection value (FDT1)	0.00 Hz to maximum frequency	50.00 Hz	☆
H08.20	Frequency detection hysteresis (FDT hysteresis 1)	0.0%-100.0% (FDT1 level)	5.0%	☆
H08.21	Detection range of frequency reached	0.00-100% (maximum frequency)	0.0%	☆

Function Code	Parameter Name	Setting Range	Default	Property
H08.22	Jump frequency during acceleration/deceleration	0: Disabled1: Enabled	0	☆
H08.25	Frequency switchover point between acceleration time 1 and acceleration time 2	0.00 Hz to maximum frequency	0.00 Hz	☆
H08.26	Frequency switchover point between deceleration time 1 and deceleration time 2	0.00 to maximum frequency	0.00 Hz	☆
H08.27	Terminal JOG preferred	0: Disabled1: Enabled	0	☆
H08.28	Frequency detection value (FDT2)	0.00 to maximum frequency	50.00 Hz	☆
H08.29	Frequency detection hysteresis (FDT hysteresis 2)	0.0%-100.0% (FDT2 level)	5.0%	☆
H08.30	Any frequency reaching detection value 1	0.00 Hz to maximum frequency	50.00 Hz	☆
H08.31	Any frequency reaching detection amplitude 1	0.0%-100.0% (maximum frequency)	0.0%	☆
H08.32	Any frequency reaching detection value 2	0.00 Hz to maximum frequency	50.00 Hz	☆
H08.33	Any frequency reaching detection amplitude 2	0.0%-100.0% (maximum frequency)	0.0%	☆
H08.34	Zero current detection level	0.0%-300.0% (rated motor current)	5.0%	☆
H08.35	Zero current detection delay time	0.00-600.00s	0.10s	☆
H08.36	Output overcurrent threshold	0.0 % (no detection) 0.1 %-300.0% (rated motor current)	200.0%	☆
H08-37	Output overcurrent detection delay time	0.00-600.00s	0.00s	☆
H08.38	Any current reaching 1	0.0%-300.0% (rated motor current)	100.0%	☆
H08.39	Any current reaching 1 amplitude	0.0%-300.0% (rated motor current)	0.0%	☆

Function Code	Parameter Name	Setting Range	Default	Property
H08.40	Any current reaching 2	0.0%-300.0% (rated motor current)	100.0%	☆
H08.41	Any current reaching 2 amplitude	0.0%-300.0% (rated motor current)	0.0%	☆
H08.42	Timing function	0: Disabled 1: Enabled	0	☆
H08.43	Timing duration source	0: H08.44 1: AI1 2: AI2 3: AI3 (100% of analog input corresponds to the value of H08.44)	0	☆
H08.44	Timing duration	0.0-6500.0 min	0.0 min	☆
H08.45	AI1 input voltage lower limit	0.00 V to H08.46	3.10 V	☆
H08.46	AI1 input voltage upper limit	H08.45 to 10.00 V	6.80 V	☆
H08.47	Module temperature threshold	0–100℃	75℃	☆
H08.48	Cooling fan control	0: Fan working during running 1: Fan working continuously	0	☆
H08.49	Wakeup frequency	Dormant frequency (H08.51) to maximum frequency (H00.05)	0.00 Hz	☆
H08.50	Wakeup delay time	0.0-6500.0s	0.0s	☆
H08.51	Dormant frequency	0.00 Hz to wakeup frequency (H08.49)	0.00 Hz	☆
H08.52	Dormant delay time	0.0-6500.0s	0.0s	☆
H08.53	Current running time reached	0.0-6500.0 min	0.0 min	☆
Group H09: Process Control PID Function				
H09.00	PID setting source	0: H09.01 1: AI1 2: AI2 3: AI3 4: Pulse setting (DI5)	0	☆

		5: Communication setting 6: Multi-reference		
H09.01	PID digital setting	0.0%-100.0%	50.0%	☆
H09.02	PID feedback source	0: AI1 1: AI2 2: AI3 3: AI1 - AI2 4: Pulse setting (DI5) 5: Communication setting 6: AI1 + AI2 7: MAX (|AI1|, |AI2|) 8: MIN (|AI1|, |AI2|)	0	☆
H09.03	PID action direction	0: Forward action 1: Reverse action	0	☆
H09.04	Proportional gain Kp1	0.0-100.0	20.0	☆
H09.05	Integral time Ti1	0.01-10.00s	2.00s	☆
H09.06	Differential time Td1	0.00-10.000	0.000s	☆
H09.07	PID setting feedback range	0-65535	1000	☆
H09.08	Cut-off frequency of PID reverse rotation	0.00 to maximum frequency	2.00 Hz	☆
H09.09	PID deviation limit	0.0%-100.0%	0.0%	☆
H09.10	PID differential limit	0.00%-100.00%	0.10%	☆
H09.11	PID setting change time	0.00-650.00s	0.00s	☆
H09.12	PID feedback filter time	0.00-60.00s	0.00s	☆
H09.13	PID output filter time	0.00-60.00s	0.00s	☆
H09-14	Reserved	-	-	☆
H09.15	Proportional gain Kp2	0.0-100.0	20.0	☆

H09.16	Integral time Ti2	0.01-10.00s	2.00s	☆
H09.17	Differential time Td2	0.000-10.000s	0.000s	☆
H09.18	PID parameter switchover condition	0: No switchover 1: Switchover via DI 2: Automatic switchover based on deviation	0	☆
H09.19	PID parameter switchover deviation 1	0.0% to H09.20	20.0%	☆
H09.20	PID parameter switchover deviation 2	H09.19 to 100.0%	80.0%	☆
H09.21	PID initial value	0.0%-100.0%	0.0%	☆
H09.22	PID initial value holding time	0.00-650.00s	0.00s	☆
H09.23	Maximum deviation between two PID outputs in forward direction	0.00%-100.00%	1.00%	☆
H09.24	Maximum deviation between two PID outputs in reverse direction	0.00%-100.00%	1.00%	☆
H09.25	PID integral property	Unit's digit (Integral separated) 0: Invalid 1: Valid Ten's digit (Whether to stop integral operation when the output reaches the limit) 0: Continue integral operation 1: Stop integral operation	00	☆
H09.26	Detection value of PID feedback loss	0.0%: Not judging feedback loss 0.1%-100.0%	0.0%	☆
H09.27	Detection time of PID feedback loss	0.0-20.0s	0.0s	☆
H09.28	PID operation at stop	0: No PID operation at stop 1: PID operation at stop	1	☆
Group H10: Multi-Reference and Simple PLC Function				
H10.00	Reference 0	-100.0%-100.0%	0.0%	☆

H10.01	Reference 1	-100.0%~100.0%	0.0%	☆
H10.02	Reference 2	-100.0%~100.0%	0.0%	☆
H10.03	Reference 3	-100.0%~100.0%	0.0%	☆
H10.04	Reference 4	-100.0%~100.0%	0.0%	☆
H10.05	Reference 5	-100.0%~100.0%	0.0%	☆
H10.06	Reference 6	-100.0%~100.0%	0.0%	☆
H10.07	Reference 7	-100.0%~100.0%	0.0%	☆
H10.08	Reference 8	-100.0%~100.0%	0.0%	☆
H10.09	Reference 9	-100.0%~100.0%	0.0%	☆
H10.10	Reference 10	-100.0%~100.0%	0.0%	☆
H10.11	Reference 11	-100.0%~100.0%	0.0%	☆
H10.12	Reference 12	-100.0%~100.0%	0.0%	☆
H10.13	Reference 13	-100.0%~100.0%	0.0%	☆
H10.14	Reference 14	-100.0%~100.0%	0.0%	☆
H10.15	Reference 15	-100.0%~100.0%	0.0%	☆
H10.16	Simple PLC running mode	0: Stop after the AC drive runs one cycle 1: Keep final values after the AC drive runs one cycle 2: Repeat after the AC drive runs one cycle	0	☆
H10.17	Simple PLC retentive selection	Unit's digit (Retentive upon power failure) 0: No 1: Yes	00	☆

		Ten's digit (Retentive upon stop) 0: No 1: Yes		
H10.18	Running time of simple PLC reference 0	0.0-6553.5s (h)	0.0s (h)	☆
H10.19	Acceleration/deceleration time of simple PLC reference 0	0-3	0	☆
H10.20	Running time of simple PLC reference 1	0.0-6553.5s (h)	0.0s (h)	☆
H10.21	Acceleration/deceleration time of simple PLC reference 1	0-3	0	☆
H10.22	Running time of simple PLC reference 2	0.0-6553.5s (h)	0.0s (h)	☆
H10.23	Acceleration/deceleration time of simple PLC reference 2	0-3	0	☆
H10.24	Running time of simple PLC reference 3	0.0-6553.5s (h)	0.0s (h)	☆
H10.25	Acceleration/deceleration time of simple PLC reference 3	0-3	0	☆
H10.26	Running time of simple PLC reference 4	0.0-6553.5s (h)	0.0s (h)	☆
H10.27	Acceleration/deceleration time of simple PLC reference 4	0-3	0	☆
H10.28	Running time of simple PLC reference 5	0.0-6553.5s (h)	0.0s (h)	☆
H10.29	Acceleration/deceleration time of simple PLC reference 5	0-3	0	☆
H10.30	Running time of simple PLC reference 6	0.0-6553.5s (h)	0.0s (h)	☆
H10.31	Acceleration/deceleration time of simple PLC reference 6	0-3	0	☆
H10.32	Running time of simple PLC reference 7	0.0-6553.5s (h)	0.0s (h)	☆
H10.33	Acceleration/deceleration time of simple PLC reference 7	0-3	0	☆

H10.34	Running time of simple PLC reference 8	0.0-6553.5s (h)	0.0s (h)	☆
H10.35	Acceleration/deceleration time of simple PLC reference 8	0-3	0	☆
H10.36	Running time of simple PLC reference 9	0.0-6553.5s (h)	0.0s (h)	☆
H10.37	Acceleration/deceleration time of simple PLC reference 9	0-3	0	☆
H10.38	Running time of simple PLC reference 10	0.0-6553.5s (h)	0.0s (h)	☆
H10.39	Acceleration/deceleration time of simple PLC reference 10	0-3	0	☆
H10.40	Running time of simple PLC reference 11	0.0-6553.5s (h)	0.0s (h)	☆
H10.41	Acceleration/deceleration time of simple PLC reference 11	0-3	0	☆
H10.42	Running time of simple PLC reference 12	0.0-6553.5s (h)	0.0s (h)	☆
H10.43	Acceleration/deceleration time of simple PLC reference 12	0-3	0	☆
H10.44	Running time of simple PLC reference 13	0.0-6553.5s (h)	0.0s (h)	☆
H10.45	Acceleration/deceleration time of simple PLC reference 13	0-3	0	☆
H10.46	Running time of simple PLC reference 14	0.0-6553.5s (h)	0.0s (h)	☆
H10.47	Acceleration/deceleration time of simple PLC reference 14	0-3	0	☆
H10.48	Running time of simple PLC reference 15	0.0-6553.5s (h)	0.0s (h)	☆
H10.49	Acceleration/deceleration time of simple PLC reference 15	0-3	0	☆
H10.50	Time unit of simple PLC running	0: s (second)1:h (hour)	0	☆
H10.51	Reference 0 source	0: Set by H10.00 1: AI1 2: AI2 3: AI3 4: Pulse setting	0	☆

Function Code	Parameter Name	Setting Range	Default	Property
H10.51	Reference 0 source	5: PID 6: Set by preset frequency (H00- 08), modified via terminal UP/ DOWN	0	☆
Group H11: Fault and Protection				
H11.00	Motor overload protection selection	0: Disabled 1: Enabled	1	☆
H11.01	Motor overload protection gain	0.20-10.00	1.00	☆
H11.02	Motor overload warning coefficient	50%-100%	80%	☆
H11.03	Overvoltage stall protective voltage	120%-150%	130%	☆
H11.04	Overvoltage stall gain	0 (no stall overvoltage)-100	0	☆
H11.05	Overcurrent stall gain	0-100	20	☆
H11.06	Overcurrent stall protective current	100%-200%	150%	☆
H11.07	Short-circuit to ground upon power-on	0: Disabled 1: Enabled	1	☆
H11.09	Input phase loss protection/ contactor energizing protection selection	Unit's digit: Input phase loss protection Ten's digit: Contactor energizing protection 0: Disabled 1: Enabled	11	☆
H11.10	Output phase loss protection selection	0: Disabled 1: Enabled	1	☆
H11.11	Fault auto reset times	0-20	0	☆
H11.12	DO action during fault auto reset	0: Not act 1: Act	0	☆
H11.13	Time interval of fault auto reset	0.1s-100.0s	1.0s	☆
H11.14	1st fault type	0: No fault	-	●

Function Code	Parameter Name	Setting Range	Default	Property
H11.15	2nd fault type	1: Inverter unit protection 4: Overcurrent during acceleration 5: Overcurrent during deceleration 6: Overcurrent at constant speed 7: Overvoltage during acceleration 8: Overvoltage during deceleration 9: Overvoltage at constant speed 10: Undervoltage 11: Motor overload 12: AC drive overload 13: Power input phase loss 14: Power output phase loss 15: Module overheat 16: Communication fault 17: External equipment fault 18: Motor auto-tuning fault 19: Current detection fault 20: Encoder/PG card fault 21: EEPROM read-write fault 22: AC drive hardware fault 23: Short circuit to ground 24: Reserved 25: Reserved 26: Accumulative running time reached 27: User-defined fault 1 28: User-defined fault 2 29: Accumulative power-on time reached 30: Load becoming 0 31: PID feedback lost during running 33: Contactor fault	-	

H11.16	3rd (latest) fault type	40: With-wave current limit fault 41: Motor switchover fault during running 42: Too large speed deviation 43: Motor over-speed 45: Motor overheat 51: Initial position fault	-	●
H11.17	Frequency upon 3rd fault	-	-	●
H11.18	Current upon 3rd fault	-	-	●
H11.19	Bus voltage upon 3rd fault	-	-	●
H11.20	DI status upon 3rd fault	-	-	●
H11.21	Output terminal status upon 3rd fault	-	-	●
H11.22	AC drive status upon 3rd fault	-	-	●
H11.23	Power-on time upon 3rd fault	-	-	●
H11.24	Running time upon 3rd fault	-	-	●
H11.27	Frequency upon 2nd fault	-	-	●
H11.28	Current upon 2nd fault	-	-	●
H11.29	Bus voltage upon 2nd fault	-	-	●
H11.30	DI status upon 2nd fault	-	-	●
H11.31	Output terminal status upon 2nd fault	-	-	●
H11.32	Frequency upon 2nd fault	-	-	●
H11.33	Current upon 2nd fault	-	-	●
H11.34	Bus voltage upon 2nd fault	-	-	●
H11.37	Frequency upon 1st fault	-	-	●
H11.38	Current upon 1st fault	-	-	●
H11.39	Bus voltage upon 3rd fault	-	-	●
H11.40	DI status upon 1st fault	-	-	●
H11.41	Output terminal status upon 1st fault	-	-	●
H11.42	DI status upon 1st fault	-	-	●

Function Code	Parameter Name	Setting Range	Default	Property
H11.43	Output terminal status upon 1st fault	-	-	●
H11.44	Frequency upon 1st fault	-	-	●
H11.47	Fault protection action selection 1	Unit's digit (Motor overload, E011) 0: Coast to stop 1: Stop according to the stop mode 2: Continue to run Ten's digit (Power input phase loss, E013) Same as unit's digit Hundred's digit (Power output phase loss, E014) Same as unit's digit Thousand's digit (External equipment fault, E017) Same as unit's digit Ten thousand's digit (Communication fault, E016) Same as unit's digit	00000	☆
H11.48	Fault protection action selection 2	Unit's digit (Encoder fault, E020) 0: Coast to stop 1: Switch over to V/F control, stop according to the stop mode 2: Switch over to V/F control, continue to run Ten's digit (EEPROM read-write fault, E021) 0: Coast to stop 1: Stop according to the stop mode	00000	☆
H11.48	Fault protection action	Hundred's digit: reserved	00000	☆

	selection 2	Thousand's digit (Motor overheat, E015)		
		Same as unit's digit in H11.47		
		Ten thousand's digit (Accumulative running time E026)		
		Same as unit's digit in H11.47		
H11.49	Fault protection action selection 3	Unit's digit (User-defined fault 1, E027)	00000	☆
		Same as unit's digit in H11.47		
		Ten's digit (User-defined fault 2, E028)		
		Same as unit's digit in H11.47		
		Hundred's digit (Accumulative power-on time reached, E029)		
		Same as unit's digit in H11.47		
		Thousand's digit (Load becoming 0, E030)		
		0: Coast to stop 1: Stop according to the stop mode 2: Continue to run at 7% of rated motor frequency and resume to the set frequency if the load recovers		
		Ten thousand's digit (PID feedback lost during running, E031)		
		Same as unit's digit in H11.47		
H11.50	Fault protection action selection 4	Unit's digit (Too large speed deviation, E042)	00000	☆
		Same as unit's digit in H11.47		
		Ten's digit (Motor over-speed, E043)		

Function Code	Parameter Name	Setting Range	Default	Property
		Same as unit's digit in H11.47		
		Hundred's digit (Initial position fault, E051)		
		Same as unit's digit in H11.47		
		Thousand's digit (Speed feedback fault, E052)		
		Same as unit's digit in H11.47		
		Ten thousand's digit: Reserved		
H11.54	Frequency selection for continuing to run upon fault	0: Current running frequency 1: Set frequency 2: Frequency upper limit 3: Frequency lower limit 4: Backup frequency upon abnormality	0	☆
H11.55	Backup frequency upon abnormality	0.0%-100.0% (maximum frequency)	100.0%	☆
H11.56	Type of motor temperature sensor	0: No temperature sensor 1: PT100 2: PT1000	1	☆
H11.57	Motor overheat protection threshold	0-200℃	110℃	☆
H11.58	Motor overheat warning threshold	0-200℃	90℃	☆
H11.59	Action selection at instantaneous power failure	0: Invalid 1: Decelerate 2: Decelerate to stop	0	☆
H11.60	Action pause judging voltage at instantaneous power failure	80.0%-100.0%	90.0%	☆
H11.61	Voltage rally judging time at instantaneous power failure	0.00-100.00s	0.50s	☆
H11.62	Action judging voltage at instantaneous power failure	60.0%-100.0% (standard bus voltage)	80.0%	☆

H11.63	Protection upon load becoming 0	0: Disabled 1: Enabled	0	☆
H11.64	Detection level of load becoming 0	0.0%-100.0% (rated motor current)	10.0%	☆
H11.65	Detection time of load becoming 0	0.0-60.0s	1.0s	☆
H11.67	Over-speed detection value	0.0%-50.0% (maximum frequency)	20.0%	☆
H11.68	Over-speed detection time	0.0-60.0s	1.0s	☆
H11.69	Detection value of too large speed deviation	0.0%-50.0% (maximum frequency)	20.0%	☆
H11.70	Detection time of too large speed deviation	0.0-60.0s	5.0s	☆
Group H12: Communication Parameters				
H12.00	Local address	0: Broadcast address 1-247 Valid for Modbus, PROFIBUS-DP and CANlink	1	☆
H12.01	Baud rate	Unit's digit (Modbus baud rate) 0: 300 BPs 1: 600 BPs 2: 1200 BPs 3: 2400 BPs 4: 4800 BPs 5: 9600 BPs 6: 19200 BPs 7: 38400 BPs 8: 57600 BPs 9: 115200 BPs Ten's digit (PROFIBUS-DP baud rate) 0: 115200 BPs 1: 208300 BPs 2: 256000 BPs 3: 512000 Bps Hundred's digit (reserved)	6005	☆

Function Code	Parameter Name	Setting Range	Default	Property
		Thousand's digit (CANlink baud rate) 0: 20 1: 50 2: 100 3: 125 4: 250 5: 500 6: 1 M		
H12.02	Data format	0: No check, data format <8,N,2> 1: Even parity check, data format <8,E,1> 2: Odd Parity check, data format <8,O,1> 3: No check, data format <8,N,1> Valid for Modbus	0	☆
H12.03	Response delay	0-20 ms Valid for Modbus	2 ms	☆
H12.04	Communication timeout	0.0s (invalid) 0.1-60.0s Valid for Modbus, PROFIBUS-DP and CANopen	0.0s	☆
H12.05	Modbus protocol selection and PROFIBUS-DP data format	Unit's digit: Modbus protocol 0: Non-standard Modbus protocol 1: Standard Modbus protocol Ten's digit: PROFIBUS-DP data format 0: PPO1 format 1: PPO2 format 2: PPO3 format 3: PPO5 format	30	☆
H12.06	Communication reading current resolution	0: 0.01A 1: 0.1A	0	☆

Function Code	Parameter Name	Setting Range	Default	Property
Group H13: Swing Frequency, Fixed Length and Count				
H13.00	Swing frequency setting mode	0: Relative to the central frequency 1: Relative to the maximum frequency	0	☆
H13.01	Swing frequency amplitude	0.0%-100.0%	0.0%	☆
H13.02	Jump frequency amplitude	0.0%-50.0%	0.0%	☆
H13.03	Swing frequency cycle	0.0-3000.0s	10.0s	☆
H13.04	Triangular wave rising time coefficient	0.0%-100.0%	50.0%	☆
H13.05	Set length	0-65535 m	1000 m	☆
H13.06	Actual length	0-65535 m	0 m	☆
H13.07	Number of pulses per meter	0.1-6553.5	100.0	☆
H13.08	Set count value	1-65535	1000	☆
H13.09	Designated count value	1-65535	1000	☆
Group H14: User-defined Parameters				
H14.00	User-defined function code 0	H00.00~H32.XX H67.XX	H00.05	☆
H14.01	User-defined function code 1		H00.01	☆
H14.02	User-defined function code 2		H00.02	☆
H14.03	User-defined function code 3		H00.18	☆
H14.04	User-defined function code 4		H00.00	☆
H14.05	User-defined function code 5		H00.03	☆
H14.06	User-defined function code 6		H00.04	☆
H14.07	User-defined function code 7		H04.00	☆
H14.08	User-defined function code 8		H04.01	☆
H14.09	User-defined function code 9		H05.00	☆
H14.10	User-defined function code 10		H05.01	☆

	Parameter Name	Setting Range	Default	Property
H14.11	User-defined function code11	H00.00~H32.XX H67.XX	H05.02	☆
H14.12	User-defined function code12		H06.03	☆
H14.13	User-defined function code13		H06.07	☆
H14.14	User-defined function code14		H01.00	☆
H14.15	User-defined function code15		H01.05	☆
H14.16	User-defined function code16		H00.14	☆
H14.17	User-defined function code17		H00.14	☆
H14.18	User-defined function code18		H00.14	☆
H14.19	User-defined function code 19		H00.14	☆
H14.20	User-defined function code 20		H00.14	☆
H14.21	User-defined function code 21		H00.14	☆
H14.22	User-defined function code22		H00.14	☆
H14.23	User-defined function code 23		H00.14	☆
H14.24	User-defined function code 24		H00.14	☆
H14.25	User-defined function code 25		H00.14	☆
H14.26	User-defined function code 26		H00.14	☆
H14.27	User-defined function code 27		H00.14	☆
H14.28	User-defined function code 28		H00.14	☆
H14.29	User-defined function code 29		H00.14	☆

Function Code	Parameter Name	Setting Range	Default	Property
Group H16: Function Code Management				
H16.00	reserved			
H16.01	Serial communication protocol	0: Modbus protocol 1: Profibus-DP bridge 2: CANopen bridge	0	☆
H16.02	AC drive parameter display property	Unit's digit (Group H67 display selection) 0: Not display 1: Display Ten's digit (Group H17-H32 display selection) 0: Not display 1: Display	11	★
H16.03	Individualized parameter display property	Unit's digit (User-defined parameter display selection) 0: Not display 1: Display Ten's digit (User-modified parameter display selection) 0: Not display 1: Display	00	☆
Group H17: Torque Control and Restricting Parameters				
H17.00	Speed/Torque control selection	0: Speed control 1: Torque control	0	★

Function Code	Parameter Name	Setting Range	Default	Property
H17.01	Torque setting source in torque control	0: Digital setting (H17.03) 1: AI1 2: AI2 3: AI3 4: Pulse setting (DI5) 5: Communication setting 6: MIN (AI1, AI2) 7: MAX (AI1, AI2) Full range of values 1-7 corresponds to the digital setting of H17.03.	0	★
H17.03	Torque digital setting in torque control	-200.0%-200.0%	150.0%	☆
H17.05	Forward maximum frequency in torque control	0.00 Hz to maximum frequency (H00.05)	50.00 Hz	☆
H17.06	Reverse maximum frequency in torque control	0.00 Hz to maximum frequency (H00.05)	50.00 Hz	☆
H17.07	Acceleration time in torque control	0.00-65000s	0.00s	☆
H17.08	Deceleration time in torque control	0.00-65000s	0.00s	☆
Group H18: Virtual DI (VDI)/Virtual DO (VDO)				
H18.00	VDI1 function selection	0-59	0	★
H18.01	VDI2 function selection	0-59	0	★
H18.02	VDI3 function selection	0-59	0	★
H18.03	VDI4 function selection	0-59	0	★
H18.04	VDI5 function selection	0-59	0	★
H18.05	VDI state setting mode	Unit's digit (VDI1) 0: Decided by state of VDOx 1: Decided by H18.06 Ten's digit (VDI2)	00000	★

		0, 1 (same as VDI1)		
		Hundred's digit (VDI3)		
		0, 1 (same as VDI1)		
		Thousand's digit (VDI4)		
		0, 1 (same as VDI1)		
		Ten thousand's digit (VDI5)		
		0, 1 (same as VDI1)		
H18.06	VDI state selection	Unit's digit (VDI1)	00000	★
		0: Invalid 1: Valid		
		Ten's digit (VDI2)		
		0, 1 (same as VDI1)		
		Hundred's digit (VDI3)		
		0, 1 (same as VDI1)		
		Thousand's digit (VDI4)		
		0, 1 (same as VDI1)		
		Ten thousand's digit (VDI5)		
		0, 1 (same as VDI1)		
H18.07	Function selection for AI1 used as DI	0-59	0	★
H18.08	Function selection for AI2 used as DI	0-59	0	★
H18.09	Function selection for AI3 used as DI	0-59	0	★
H18.10	State selection for AI used as DI	Unit's digit (AI1)	000	★
		0: High level valid 1: Low level valid		
		Ten's digit (AI2)		
		0, 1 (same as unit's digit)		
		Hundred's digit (AI3)		
		0, 1 (same as unit's digit)		

Function Code	Parameter Name	Setting Range	Default	Property
H18.11	VDO1 function selection	0: Short with physical DIx internally 1-40: Refer to function selection of physical DO in group H06.	0	☆
H18.12	VDO2 function selection	0: Short with physical DIx internally 1-40: Refer to function selection of physical DO in group H06.	0	☆
H18.13	VDO3 function selection	0: Short with physical DIX internally 1-40: Refer to function selection of physical DO in group H06.	0	☆
H18.14	VDO4 function selection	0: Short with physical DIX internally 1-40: Refer to function selection of physical DO in group H06.	0	☆
H18.15	VDO5 function selection	0: Short with physical DIX internally 1-40: Refer to function selection of physical DO in group H06.	0	☆
H18.16	VDO1 output delay	0.0-3600.0s	0.0s	☆
H18.17	VDO2 output delay	0.0-3600.0s	0.0s	☆
H18.18	VDO3 output delay	0.0-3600.0s	0.0s	☆
H18.19	VDO4 output delay	0.0-3600.0s	0.0s	☆
H18.20	VDO5 output delay	0.0-3600.0s	0.0s	☆
H18.21	VDO state selection	Unit's digit (VDO1) 0: Positive logic 1: Reverse logic Ten's digit (VDO2) 0, 1 (same as unit's digit) Hundred's digit (VDO3) 0, 1 (same as unit's digit) Thousand's digit (VDO4) 0, 1 (same as unit's digit)	00000	☆

		Ten thousand's digit (VDO5) 0, 1 (same as unit's digit)		
Function Code	Parameter Name	Setting Range	Default	Property
Group H19: Motor 2 Parameters				
H19.00	Motor type selection	0: Common asynchronous motor 1: Variable frequency asynchronous motor 2: Permanent magnetic synchronous motor	0	★
H19.01	Rated motor power	0.1-1000.0 kW	Model dependent	★
H19.02	Rated motor voltage	1-2000 V	Model dependent	★
H19.03	Rated motor current	0.01-655.35 A (AC drive power <=55 kW) 0.1-6553.5 A (AC drive power > 55 kW)	Model dependent	★
H19.04	Rated motor frequency	0.01 Hz to maximum frequency	Model dependent	★
H19.05	Rated motor rotational speed	1-65535 RPM	Model dependent	★
H19.06	Stator resistance (asynchronous motor)	0.001-65.535 Ω (AC drive power ≤55 kW) 0.0001-6.5535 Ω (AC drive power > 55 kW)	Model dependent	★
H19.07	Rotor resistance (asynchronous motor)	0.001-65.535 Ω (AC drive power ≤55 kW) 0.0001-6.5535 Ω (AC drive power > 55 kW)	Model dependent	★
H19.08	Leakage inductive reactance (asynchronous motor)	0.01-655.35 mH (AC drive power ≤55 kW) 0.001-65.535 mH (AC drive power > 55 kW)	Model dependent	★
H19.09	Mutual inductive reactance (asynchronous motor)	0.1-6553.5 mH (AC drive power ≤55 kW) 0.01-655.35 mH (AC drive power > 55 kW)	Model dependent	★

Function Code	Parameter Name	Setting Range	Default	Property
H19.10	No-load current (asynchronous motor)	0.01 A to H19.03 (AC drive power ≤ 55 kW) 0.1 A to H19.03 (AC drive power > 55 kW)	Model dependent	★
H19-16	Stator resistance (synchronous motor)	0.001-65.535 Ω (AC drive power ≤ 55 kW) 0.0001-6.5535 Ω (AC drive power > 55 kW)	Model dependent	★
H19-17	Shaft D inductance (synchronous motor)	0.01-655.35 mH (AC drive power ≤ 55 kW) 0.001-65.535 mH (AC drive power > 55 kW)	Model dependent	★
H19-18	Shaft Q inductance (synchronous motor)	0.01-655.35 mH (AC drive power ≤ 55 kW) 0.001-65.535 mH (AC drive power > 55 kW)	Model dependent	★
H19-20	Back EMF (synchronous motor)	0.1-6553.5 V	Model dependent	★
H19.27	Encoder pulses per revolution	1-65535	1024	★
H19.28	Encoder type	0: ABZ incremental encoder 1: UVW incremental encoder 2: Resolver 3: SIN/COS encoder 4: Wire-saving UVW encoder	0	★
H19.30	A, B phase sequence of ABZ incremental encoder	0: Forward 1: Reserve	0	★
H19.31	Encoder installation angle	0.0 - 359.9°	0.0°	★
H19.32	U, V, W phase sequence of UVW encoder	0: Forward 1: Reverse	0	★
H19.33	UVW encoder angle offset	0.0 - 359.9℃	0.0°	★
H19.34	Number of pole pairs of resolver	1-65535	1	★
H19.36	Encoder wire-break fault detection time	0.0s: No action 0.1-10.0s	0.0s	★

Function Code	Parameter Name	Setting Range	Default	Property
H19.37	Auto-tuning selection	0: No auto-tuning 1: Asynchronous motor static auto-tuning 2: Asynchronous motor complete auto-tuning 11: Synchronous motor with-load auto-tuning 12: Synchronous motor no-load auto-tuning	0	★
H19.38	Speed loop proportional gain 1	1-100	30	☆
H19.39	Speed loop integral time 1	0.01-10.00s	0.50s	☆
H19.40	Switchover frequency 1	0.00 to H19.43	5.00 Hz	☆
H19.41	Speed loop proportional gain 2	1-100	20	☆
H19.42	Speed loop integral time 2	0.01-10.00s	1.00s	☆
H19.43	Switchover frequency 2	H19.40 to maximum output frequency	10.00 Hz	☆
H19.44	Vector control slip gain	50%-200%	100%	☆
H19.45	Time constant of speed loop filter	0.000-0.100s	0.000s	☆
H19.46	Vector control overexcitation gain	0-200	64	☆
H19.47	Torque upper limit source in speed control mode	0: H19.48 1: AI1 2: AI2 3: AI3 4: Pulse setting (DI5) 5: Via communication 6: MIN(AI1,AI2) 7: MIN(AI1,AI2)	0	☆
H19.48	Digital setting of torque upper limit in speed control mode	0.0%-200.0%	150.0%	☆
H19.51	Excitation adjustment proportional gain	0-20000	2000	☆

Function Code	Parameter Name	Setting Range	Default	Property
H19.52	Excitation adjustment integral gain	0-20000	1300	☆
H19.53	Torque adjustment proportional gain	0-20000	2000	☆
H19.54	Torque adjustment integral gain	0-20000	1300	☆
H19.55	Speed loop integral property	Unit's digit: Integral separated 0: Disabled 1: Enabled	0	☆
H19.56	Field weakening mode of synchronous motor	0: No field weakening 1: Direct calculation 2: Adjustment	0	☆
H19.57	Field weakening degree of synchronous motor	50%-500%	100%	☆
H19.58	Maximum field weakening current	1%-300%	50%	☆
H19.59	Field weakening automatic adjustment gain	10%-500%	100%	☆
H19.60	Field weakening integral multiple	2-10	2	☆
H19.61	Motor 2 control mode	0: Sensorless flux vector control (SFVC) 1: Closed-loop vector control (CLVC) 2: Voltage/Frequency (V/F) control	0	☆
H19.62	Motor 2 acceleration/ deceleration time	0: Same as motor 1 1: Acceleration/Deceleration time 1 2: Acceleration/Deceleration time 2 3: Acceleration/Deceleration time 3 4: Acceleration/Deceleration time 4	0	☆
H19.63	Motor 2 torque boost	0.0%: Automatic torque boost 0.1%-30.0%	Model dependent	☆

Function Code	Parameter Name	Setting Range	Default	Property
H19.65	Motor 2 oscillation suppression gain	0 -100	Model dependent	☆
Group H20: Motor 3 Parameters				
H20.00	Motor type selection	0: Common asynchronous motor 1: Variable frequency asynchronous motor 2: Permanent magnetic synchronous motor	0	★
H20.01	Rated motor power	0.1-1000.0 kW	Model dependent	★
H20.02	Rated motor voltage	1-2000 V	Model dependent	★
H20.03	Rated motor current	0.01-655.35A(AC drive power ≤55kw) 0.1-6553.5 A (AC drive power > 55 kW)	Model dependent	★
H20.04	Rated motor frequency	0.01 Hz to maximum frequency	Model dependent	★
H20.05	Rated motor rotational speed	1-65535 RPM	Model dependent	★
H20.06	Stator resistance (asynchronous motor)	0.001-65.535 Ω (AC drive power ≤ 55 kW) 0.0001-6.5535 Ω (AC drive power > 55 kW)	Model dependent	★
H20.07	Rotor resistance (asynchronous motor)	0.001-65.535 Ω (AC drive power ≤ 55 kW) 0.0001-6.5535 Ω (AC drive power > 55 kW)	Model dependent	★
H20.08	Leakage inductive reactance (asynchronous motor)	0.01-655.35 mH (AC drive power ≤55 kW) 0.001-65.535 mH (AC drive power > 55 kW)	Model dependent	★
H20.09	Mutual inductive reactance (asynchronous motor)	0.1-6553.5 mH (AC drive power ≤55 kW) 0.01-655.35 mH (AC drive power > 55 kW)	Model dependent	★

Function Code	Parameter Name	Setting Range	Default	Property
H20.10	No-load current (asynchronous motor)	0.01 A to H19.03 (AC drive power ≤55 kW) 0.1 A to H19.03 (AC drive power > 55 kW)	Model dependent	★
H20.16	Stator resistance (synchronous motor)	0.001-65.535Ω (AC drive power ≤55 kW) 0.0001-6.5535Ω (AC drive power > 55 kW)	Model dependent	★
H20.17	Shaft D inductance (synchronous motor)	0.01-655.35 mH (AC drive power ≤55 kW) 0.001-65.535 mH (AC drive power > 55 kW)	Model dependent	★
H20.18	Shaft Q inductance (synchronous motor)	0.01-655.35 mH (AC drive power ≤55 kW) 0.001-65.535 mH (AC drive power > 55 kW)	Model dependent	★
H20.20	Back EMF (synchronous motor)	0.1-6553.5 V	Model dependent	★
H20.27	Encoder pulses per revolution	1-65535	1024	★
H20.28	Encoder type	0: ABZ incremental encoder 1: UVW incremental encoder 2: Resolver 3: SIN/COS encoder 4: Wire-saving UVW encoder	0	★
H20.30	A, B phase sequence of ABZ incremental encoder	0: Forward 1: Reserve	0	★
H20.31	Encoder installation angle	0.0 - 359.9°	0.0°	★
H20.32	U, V, W phase sequence of UVW encoder	0: Forward 1: Reverse	0	★
H20.33	UVW encoder angle offset	0.0 - 359.9°	0.0°	★
H20.34	Number of pole pairs of resolver	1-65535	1	★
H20.36	Encoder wire-break fault detection time	0.0s: No action 0.1-10.0s	0.0s	★

Function Code	Parameter Name	Setting Range	Default	Property
H20.37	Auto-tuning selection	0: No auto-tuning 1: Asynchronous motor static auto-tuning 2: Asynchronous motor complete auto-tuning 11: Synchronous motor with-load auto-tuning 12: Synchronous motor no-load auto-tuning	0	★
H20.38	Speed loop proportional gain 1	0-100	30	☆
H20.39	Speed loop integral time 1	0.01-10.00s	0.50s	☆
H20.40	Switchover frequency 1	0.00 to H19.43	5.00 Hz	☆
H20.41	Speed loop proportional gain 2	0-100	15	☆
H20.42	Speed loop integral time 2	0.01-10.00s	1.00s	
H20.43	Switchover frequency 2	H19.40 to maximum output frequency	10.00 Hz	☆
H20.44	Vector control slip gain	50%-200%	100%	☆
H20.45	Time constant of speed loop filter	0.000-0.100s	0.000s	☆
H20.46	Vector control overexcitation gain	0-200	64	☆
H20.47	Torque upper limit source in speed control mode	0: H19.48 1: AI1 2: AI2 3: AI3 4: Pulse setting (DI5) 5: Via communication 6: MIN (AI1,AI2) 7: MAX (AI1,AI2)	0	☆
H20.48	Digital setting of torque upper limit in speed control mode	0.0%-200.0%	150.0%	☆
H20.51	Excitation adjustment proportional gain	0-20000	2000	☆
H20.52	Excitation adjustment integral gain	0-20000	1300	☆

H20.53	Torque adjustment proportional gain	0-20000	2000	☆
H20.54	Torque adjustment integral gain	0-20000	1300	☆
H20.55	Speed loop integral property	Unit's digit: Integral separated 0: Disabled 1: Enabled	0	☆
H20.56	Field weakening mode of synchronous motor	0: No field weakening 1: Direct calculation 2: Adjustment	0	☆
H20.57	Field weakening degree of synchronous motor	50%-500%	100%	☆
H20.58	Maximum field weakening current	1%-300%	50%	☆
H20.59	Field weakening automatic adjustment gain	10%-500%	100%	☆
H20.60	Field weakening integral multiple	2-10	2	☆
H20.61	Motor 2 control mode	0: Sensorless flux vector control (SFVC) 1: Closed-loop vector control (CLVC) 2: Voltage/Frequency (V/F) control	0	☆
H20.62	Motor 2 acceleration/ deceleration time	0: Same as motor 1 1: Acceleration/Deceleration time1 2: Acceleration/Deceleration time2 3: Acceleration/Deceleration time3 4: Acceleration/Deceleration time4	0	☆
H20.63	Motor 2 torque boost	0.0%: Automatic torque boost 0.1%-30.0%	Model dependent	☆
H20.65	Motor 2 oscillation suppression gain	0-100	Model dependent	☆
Group H21: Motor 4 Parameters				

Function Code	Parameter Name	Setting Range	Default	Property
H21.00	Motor type selection	0: Common asynchronous motor 1: Variable frequency asynchronous motor 2: Permanent magnetic synchronous motor	0	★
H21.01	Rated motor power	0.1-1000.0 kW	Model dependent	★
H21.02	Rated motor voltage	1-2000 V	Model dependent	★
H21.03	Rated motor current	0.01-655.35A (AC drive power ≤55kw) 0.1-6553.5 A (AC drive power > 55 kW)	Model dependent	★
H21.04	Rated motor frequency	0.01 Hz to maximum frequency	Model dependent	★
H21.05	Rated motor rotational speed	1-65535 RPM	Model dependent	★
H21.06	Stator resistance (asynchronous motor)	0.001-65.535 Ω (AC drive power ≤55 kW) 0.0001-6.5535 Ω (AC drive power > 55 kW)	Model dependent	★
H21.07	Rotor resistance (asynchronous motor)	0.001-65.535 Ω (AC drive power ≤55 kW) 0.0001-6.5535 Ω (AC drive power > 55 kW)	Model dependent	★
H21.08	Leakage inductive reactance (asynchronous motor)	0.01-655.35 mH (AC drive power ≤55 kW) 0.001-65.535 mH (AC drive power > 55 kW)	Model dependent	★
H21.09	Mutual inductive reactance (asynchronous motor)	0.1-6553.5 mH (AC drive power ≤55 kW) 0.01-655.35 mH (AC drive power > 55 kW)	Model dependent	★
H21.10	No-load current (asynchronous motor)	0.01 A to H19.03 (AC drive power ≤55 kW) 0.1 A to H19.03 (AC drive power > 55 kW)	Model dependent	★

Function Code	Parameter Name	Setting Range	Default	Property
H21.16	Stator resistance (synchronous motor)	0.001-65.535Ω (AC drive power ≤55 kW) 0.0001-6.5535Ω (AC drive power > 55 kW)	Model dependent	★
H21.17	Shaft D inductance (synchronous motor)	0.01-655.35 mH (AC drive power ≤55 kW) 0.001-65.535 mH (AC drive power > 55 kW)	Model dependent	★
H21.18	Shaft Q inductance (synchronous motor)	0.01-655.35 mH (AC drive power ≤55 kW) 0.001-65.535 mH (AC drive power > 55 kW)	Model dependent	★
H21.20	Back EMF (synchronous motor)	0.1-6553.5 V	Model dependent	★
H21.27	Encoder pulses per revolution	1-65535	1024	★
H21.28	Encoder type	0: ABZ incremental encoder 1: UVW incremental encoder 2: Resolver 3: SIN/COS encoder 4: Wire-saving UVW encoder	0	★
H21.30	A, B phase sequence of ABZ incremental encoder	0: Forward 1: Reserve	0	★
H21.31	Encoder installation angle	0.0 -359.9℃	0.0℃	★
H21.32	U, V, W phase sequence of UVW encoder	0: Forward 1: Reverse	0	★
H21.33	UVW encoder angle offset	0.0 -359.9℃	0.0℃	★
H21.34	Number of pole pairs of resolver	1-65535	1	★
H21.36	Encoder wire-break fault detection time	0.0s: No action 0.1 - 10.0s	0.0s	★

Function Code	Parameter Name	Setting Range	Default	Property
H21.37	Auto-tuning selection	0: No auto-tuning 1: Asynchronous motor static auto-tuning 2: Asynchronous motor complete auto-tuning 11: Synchronous motor with-load auto-tuning 12: Synchronous motor no-load auto-tuning	0	★
H21.38	Speed loop proportional gain 1	0-100	30	☆
H21.39	Speed loop integral time 1	0.01-10.00s	0.50s	☆
H21.40	Switchover frequency 1	0.00 to H19.43	5.00 Hz	☆
H21.41	Speed loop proportional gain 2	0-100	15	☆
H21.42	Speed loop integral time 2	0.01-10.00s	1.00s	☆
H21.43	Switchover frequency 2	H19.40 to maximum output frequency	10.00 Hz	☆
H21.44	Vector control slip gain	50%-200%	100%	☆
H21.45	Time constant of speed loop filter	0.000-0.100s	0.000s	☆
H21.46	Vector control overexcitation gain	0-200	64	☆
H21.47	Torque upper limit source in speed control mode	0: H19.48 1: AI1 2: AI2 3: AI3 4: Pulse setting(DI5) 5: Via communication 6: MIN(AI1,AI2) 7: MIN(AI1,AI2)	0	☆
H21.48	Digital setting of torque upper limit in speed control mode	0.0%-200.0%	150.0%	☆
H21.51	Excitation adjustment proportional gain	0-20000	2000	☆

Function Code	Parameter Name	Setting Range	Default	Property
H21.52	Excitation adjustment integral gain	0-20000	1300	☆
H21.53	Torque adjustment proportional gain	0-20000	2000	☆
H21.54	Torque adjustment integral gain	0-20000	1300	☆
H21.55	Speed loop integral property	Unit's digit: Integral separated 0: Disabled 1: Enabled	0	☆
H21.56	Field weakening mode of synchronous motor	0: No field weakening 1: Direct calculation 2: Adjustment	0	☆
H21.57	Field weakening degree of synchronous motor	50%-500%	100%	☆
H21.58	Maximum field weakening current	1%-300%	50%	☆
H21.59	Field weakening automatic adjustment gain	10%-500%	100%	☆
H21.60	Field weakening integral multiple	2-10	2	☆
H21.61	Motor 2 control mode	0: Sensorless flux vector control (SFVC) 1: Closed-loop vector control (CLVC) 2: Voltage/Frequency (V/F) control	0	☆
H21.62	Motor 2 acceleration/ deceleration time	0: Same as motor 1 1: Acceleration/Deceleration time1 2: Acceleration/Deceleration time2 3: Acceleration/Deceleration time3 4: Acceleration/Deceleration time4	0	☆
H21.63	Motor 2 torque boost	0.0%: Automatic torque boost 0.1%-30.0%	Model dependent	☆

H21-65	Motor 2 oscillation suppression gain	0-100	Model dependent	☆
Group H22: Control Optimization Parameters				
H22.02	DPWM switchover frequency upper limit	0.00-H00.05 Hz	12.00 Hz	☆
H22.03	PWM modulation mode	0: Asynchronous modulation 1: Synchronous modulation	0	☆
H22.04	Dead zone compensation mode selection	0: No compensation 1: Compensation mode 1 2: Compensation mode 2	1	☆
H22.05	Random PWM depth	0: Random PWM invalid 1-10	0	☆
H22.06	Rapid current limit	0: Disabled1: Enabled	1	☆
H22.07	Current detection compensation	0-100	5	☆
H22.08	Undervoltage threshold	60.0%-140.0%	100.0%	☆
H22.09	SFVC optimization mode selection	0: No optimization 1: Optimization mode 1 2: Optimization mode 2	1	☆
H22.10	Dead-zone time adjustment	100%-200%	150%	☆
H22.11	Overvoltage threshold	200.0-2500.0 V	2000.0 V	☆
Group H23: AI Curve Setting				
H23.00	AI curve 4 minimum input	-10.00 V to H23.02	0.00 V	☆
H23.01	Corresponding setting of AI curve 4 minimum input	-100.0%-100.0%	0.0%	☆
H23.02	AI curve 4 inflexion 1 input	H23.00 to H23.04	3.00 V	☆
H23.03	Corresponding setting of AI curve 4 inflexion 1 input	-100.0%-100.0%	30.0%	☆
H23.04	AI curve 4 inflexion 1 input	H23.02 to H23.06	6.00 V	☆
H23.05	Corresponding setting of AI curve 4 inflexion 1 input	-100.0%-100.0%	60.0%	☆
H23.06	AI curve 4 maximum input	H23.06 to 10.00 V	10.00 V	☆

Function Code	Parameter Name	Setting Range	Default	Property
H23.07	Corresponding setting of AI curve 4 maximum input	-100.0%-100.0%	100.0%	☆
H23.08	AI curve 5 minimum input	-10.00 V to H23.10	0.00 V	☆
H23.09	Corresponding setting of AI curve 5 minimum input	-100.0%-100.0%	0.0%	☆
H23.10	AI curve 5 inflexion 1 input	H23.08 to H23.12	3.00 V	☆
H23.11	Corresponding setting of AI curve 5 inflexion 1 input	-100.0%-100.0%	30.0%	☆
H23.12	AI curve 5 inflexion 1 input	H23.10 to H23.14	6.00 V	☆
H23.13	Corresponding setting of AI curve 5 inflexion 1 input	-100.0%-100.0%	60.0%	☆
H23.14	AI curve 5 maximum input	H23.14 to 10.00 V	10.00 V	☆
H23.15	Corresponding setting of AI curve 5 maximum input	-100.0%-100.0%	100.0%	☆
H23.24	Jump point of AI1 input corresponding setting	-100.0%-100.0%	0.0%	☆
H23.25	Jump amplitude of AI1 input corresponding setting	0.0%-100.0%	0.5%	☆
H23.26	Jump point of AI2 input corresponding setting	-100.0%-100.0%	0.0%	☆
H23.27	Jump amplitude of AI2 input corresponding setting	0.0%-100.0%	0.5%	☆
H23.28	Jump point of AI3 input corresponding setting	-100.0%-100.0%	0.0%	☆
H23.29	Jump amplitude of AI3 input corresponding setting	0.0%-100.0%	0.5%	☆
Group H24 : User Programmable Function				
H24.00	User programmable function selection	0: Disabled 1: Enabled	0	★

Function Code	Parameter Name	Setting Range	Default	Property
H24.01	Selection of control mode of the output terminals on the control board	Unit's digit: FMR (FM used as digital output) 0: Controlled by the AC drive 1: Controlled by the user programmable card Ten's digit: relay (T/A-T/B-T/C) Same as unit's digit Hundred's digit: DO1 Same as unit's digit Thousand's digit FMR (FM used as pulse output) Same as unit's digit Ten thousand's digit: AO1 Same as unit's digit	0	★
H24.02	AI/AO function selection of the user programmable card	0: AI3 (voltage input), AO2 (voltage output) 1: AI3 (voltage input), AO2 (current output) 2: AI3 (current input), AO2 (voltage output) 3: AI3 (current input), AO2 (current output) 4: AI3 (PTC input), AO2 (voltage output) 5: AI3 (PTC input), AO2 (current output) 6: AI3 (PTC100 input), AO2 (voltage output) 7: AI3 (PTC100 input), AO2 (current output)	0	★
H24.03	FMP output	0.0%-100.0%	0.0%	☆
H24.04	AO1 output	0.0%-100.0%	0.0%	☆

Function Code	Parameter Name	Setting Range	Default	Property
H24.05	Digital output	Binary setting Unit's digit: FMR Ten's digit: Relay1 Hundred's digit: DO	1	☆
H24.06	Frequency setting through the user programmable card	-100.00% to 100.00%	0.0%	☆
H24.07	Torque setting through the user programmable card	-200.00% to 200.00%	0.0%	☆
H24.08	Command given by the user programmable card	1: Forward RUN 2: Reverse RUN 3: Forward JOG 4: Reverse JOG 5: Coast to stop 6: Decelerate to stop 7: Fault reset	0	☆
H24.09	Faults given by the user programmable card	0: No fault 80-89: Fault codes	0	☆

Function Code	Parameter Name	Setting Range	Default	Property
	Group H25: Point-point Communication			
H25.00	Point-point communication selection	0: Disabled 1: Enabled	0	☆
H25.01	Master and slave selection	0: Master 1: Slave	0	☆
H25.02	Slave following master command selection	0: Slave not following running commands of the master 1: Slave following running commands of the master	0	☆
H25.03	Usage of data received by slave	0: Torque setting 1: Frequency setting	0	☆
H25.04	Zero offset of received data (torque)	-100.00%-100.00%	0.00%	★
H25.05	Gain of received data (torque)	-10.00-10.00	1.00	★
H25.06	Point-point communication interruption detection time	0.0-10.0s	1.0s	☆
H25.07	Master data sending cycle	0.001-10.000s	0.001s	☆
H25.08	Zero offset of received data zero offset (frequency)	-100.00%-100.00%	0.00%	★
H25.09	Gain of received data gain (frequency)	-10.00-10.00	1.00	★
H25.10	Runaway prevention coefficient	0.00%-100.00%	10.00%	★
Group H29: AI/AO Correction				
H29.00	AI1 measured voltage 1	0.500–4.000 V	Factory corrected	☆

Function Code	Parameter Name	Setting Range	Default	Property
H29.01	AI1 displayed voltage 1	0.500-4.000V	Factory corrected	☆
H29.02	AI1 measured voltage 2	6.000-9.999V	Factory corrected	☆
H29.03	AI1 displayed voltage 2	6.000-9.999 V	Factory corrected	☆
H29.04	AI2 measured voltage 1	0.500-4.000 V	Factory corrected	☆
H29.05	AI2 displayed voltage 1	0.500-4.000 V	Factory corrected	☆
H29.06	AI2 measured voltage 2	6.000-9.999 V	Factory corrected	☆
H29.07	AI2 displayed voltage 2	9.999-10.000 V	Factory corrected	☆
H29.08	AI3 measured voltage 1	9.999-10.000 V	Factory corrected	☆
H29.09	AI3 displayed voltage 1	9.999-10.000 V	Factory corrected	☆
H29.10	AI3 measured voltage 2	9.999-10.000 V	Factory corrected	☆
H29.11	AI3 displayed voltage 2	9.999-10.000 V	Factory corrected	☆
H29.12	AO1 target voltage 1	0.500-4.000 V	Factory corrected	☆
H29.13	AO1 measured voltage 1	0.500-4.000 V	Factory corrected	☆
H29.14	AO1 target voltage 2	6.000-9.999 V	Factory corrected	☆
H29.15	AO1 measured voltage 2	6.000-9.999 V	Factory corrected	☆
H29.16	AO2 target voltage 1	0.500-4.000 V	Factory corrected	☆
H29.17	AO2 measured voltage 1	0.500-4.000 V	Factory corrected	☆

Function Code	Parameter Name	Setting Range	Default	Property
H29.18	AO2 target voltage 2	6.000-9.999 V	Factory corrected	☆
H29.19	AO2 measured voltage 2	6.000-9.999 V	Factory corrected	☆
H29.20	AI2 measured current 1	0.000-20.000 mA	Factory corrected	☆
H29.21	AI2 sampling current 1	0.000-20.000 mA	Factory corrected	☆
H29.22	AI2 measured current 2	0.000-20.000 mA	Factory corrected	☆
H29.23	AI2 sampling current 2	0.000-20.000 mA	Factory corrected	☆
H29.24	AO1 ideal current 1	0.000-20.000 mA	Factory corrected	☆
H29.25	AO1 sampling current 1	0.000-20.000 mA	Factory corrected	☆
H29.26	AO1 ideal current 2	0.000-20.000 mA	Factory corrected	☆
H29.27	AO1 sampling current 2	0.000-20.000 mA	Factory corrected	☆

5.2 Monitoring Parameters

Function Code	Parameter Name	Min. Unit	Communication Address
Group H67: Standard Monitoring Parameters			
H67.00	Running frequency (Hz)	0.01 Hz	7000H
H67.01	Set frequency (Hz)	0.01 Hz	7001H
H67.02	Bus voltage	0.1 V	7002H
H67.03	Output voltage	1 V	7003H
H67.04	Output current	0.01 A	7004H
H67.05	Output power	0.1 kW	7005H
H67.06	Output torque	0.1%	7006H
H67.07	DI state	1	7007H

Function Code	Parameter Name	Min. Unit	Communication Address
H67.08	DO state	1	7008H
H67.09	AI1 voltage (V)	0.01 V	7009H
H67.10	AI2 voltage (V)/current (mA)	0.01 V/0.01 mA	700AH
H67.11	AI3 voltage (V)	0.01 V	7007BH
H67.12	Count value	1	700CH
H67.13	Length value	1	700DH
H67.14	Load speed	1	700EH
H67.15	PID setting	1	700FH
H67.16	PID feedback	1	7010H
H67.17	PLC stage	1	7011H
H67.18	Input pulse frequency (Hz)	0.01 kHz	7012H
H67.19	Feedback speed	0.01 Hz	7013H
H67.20	Remaining running time	0.1 Min	7014H
H67.21	AI1 voltage before correction	0.001 V	7015H
H67.22	AI2 voltage (V)/current (mA) before correction	0.01 V/0.01 mA	7016H
H67.23	AI3 voltage before correction	0.001 V	7017H
H67.24	Linear speed	1 m/Min	7018H
H67.25	Accumulative power-on time	1 Min	7019
H67.26	Accumulative running time	0.1 Min	701AH
H67.27	Pulse input frequency	1 Hz	701BH
H67.28	Communication setting value	0.01%	701CH
H67.29	Encoder feedback speed	0.01 Hz	701DH
H67.30	Main frequency X	0.01 Hz	701EH
H67.31	Auxiliary frequency Y	0.01 Hz	701FH

Function Code	Parameter Name	Min. Unit	Communication Address
H67.32	Viewing any register address value	1	7020H
H67.33	Synchronous motor rotor position	0.1°	7021H
H67.34	Motor temperature	1℃	7022H
H67.35	Target torque	0.1%	7023H
H67.36	Resolver position	1	7024H
H67.37	Power factor angle	0.1°	7025H
H67.38	ABZ position	1	7026H
H67.39	Target voltage upon V/F separation	1 V	7027H
H67.40	Output voltage upon V/F separation	1V	7028H
H67.41	DI state visual display	1	7029H
H67.42	DO state visual display	1	702AH
H67.43	DI function state visual display 1	1	702BH
H67.44	DI function state visual display 2	1	702CH
H67.45	Fault information	1	702DH
H67.58	Phase Z counting	1	703AH
H67.59	Current set frequency	0.01%	703BH
H67.60	Current running frequency	0.01%	703CH
H67.61	H29 drive running state	1	703DH
H67.62	Current fault code	1	703EH
H67.63	Sent value of point-point communication	0.01%	703FH
H67.64	Received value of point-point communication	0.01%	7040H
H67.65	Torque upper limit	0.1%	7041H

6

Description of Function Codes

Chapter 6 Description of Function Codes

Group H00: Basic Parameters

Function Code	Parameter Name	Setting Range	Default
H00.00	Preset frequency	0.00 to maximum frequency (valid when frequency source is digital setting)	50.00Hz

If the frequency source is digital setting or terminal UP/DOWN, the value of this parameter is the initial frequency of the AC drive (digital setting).

CLVC is used generally. In some low-power motor applications, you can also use V/F.

Function Code	Parameter Name	Setting Range	Default
H00.01	Command source selection	0: Operation panel control (LED off) 1: Terminal control (LED on) 2: Communication control (LED blinking)	0

It is used to determine the input channel of the AC drive control commands, such as run, stop, forward rotation, reverse rotation and jog operation. You can input the commands in the following three channels:

0: Operation panel control ("LOCAL/REMOT" indicator off)

Commands are given by pressing keys RUN and STOP/RES on the operation panel.

1: Terminal control ("LOCAL/REMOT" indicator on)

Commands are given by means of multifunctional input terminals with functions such as FWD, REV, JOGF, and JOGR.

2: Communication control ("LOCAL/REMOT" indicator blinking)

Commands are given from host computer. If this parameter is set to 2, a communication card (Modbus RTU, PROFIBUS-DP card, CANlink card, user programmable card or CANopen card) must be installed.

If a PROFIBUS-DP card is selected and PZD1 data is valid, commands are given by means of PZD1 data.

If a user programmable card is selected, commands are written to H24.08 by means of the programmable card.

If any other card is selected, commands are written by means of the communication address 0x2000.

Function Code	Parameter Name	Setting Range	Default
H00.02	Main frequency source X selection	0: Digital setting (non-retentive at power failure) 1: Digital setting (retentive at power failure) 2: AI1 3: AI2 4: AI3 5: PID 6: Communication setting 7: Simple PLC 8: Multi-reference 9: Pulse setting (DI5)	0

It is used to select the setting channel of the main frequency. You can set the main frequency in the following 10 channels:

0: Digital setting (non-retentive at power failure)

The initial value of the set frequency is the value of H00.00 (Preset frequency). You can change the set frequency by pressing △ and ▽ on the operation panel (or using the UP/DOWN function of input terminals).

When the AC drive is powered on again after power failure, the set frequency reverts to the value of H00.00.

1: Digital setting (retentive at power failure)

The initial value of the set frequency is the value of H00.00 (Preset frequency). You can change the set frequency by pressing keys △ and ▽ on the operation panel (or using the UP/DOWN function of input terminals).

When the AC drive is powered on again after power failure, the set frequency is the value memorized at the moment of the last power failure.

Note that H00.08 (Retentive of digital setting frequency upon power failure) determines whether the set frequency is memorized or cleared when the AC drive stops. It is related to stop rather than power failure.

2: AI1 (0–10 V voltage input)

3: AI2 (0–10 V voltage input or 4–20 mA current input, determined by jumper J3)

4: AI3 (0–10 V voltage input)

The frequency is set by analog input. The HS930 control board provides two analog input (AI) terminals (AI1, AI2). Another AI terminal (AI3) is provided by the I/O extension card.

The HS930 provides five curves indicating the mapping relationship between the input voltage of AI1, AI2 and AI3 and the target frequency, three of which are linear

(pointpoint) correspondence and two of which are four-point correspondence curves. You can set the curves by using function codes H05.12 to H05.26 and function codes in group H23, and select curves for AI1, AI2 and AI3 in H05.33.

When AI is used as the frequency setting source, the corresponding value 100% of the voltage/current input corresponds to the value of H00.05 (Maximum frequency).

5: PID

The output of PID control is used as the running frequency. PID control is generally used in on-site closed-loop control, such as constant pressure closed-loop control and constant tension closed-loop control.

When applying PID as the frequency source, you need to set parameters of PID function in group H09.

6: Communication setting

The frequency is set by means of communication.

If the AC drive is a slave in point-point communication and receives data as the frequency source, data transmitted by the master is used as the set frequency. For details, see the description of group H25.

If PROFIBUS-DP communication is valid and PZD1 is used for frequency setting, data transmitted by PDZ1 is directly used as the frequency source. The data format is -100.00% to 100.00%. 100% corresponds to the value of H00.05 (Maximum frequency).

In other conditions, data is given by the host computer through the communication address 0x1000. The data format is -100.00% to 100.00%. 100.00% corresponds to the value of H00.05 (Maximum frequency).

The HS930 supports four host computer communication protocols: Modbus, PROFIBUS-DP, CANopen and CANlink. They cannot be used simultaneously.

If the communication mode is used, a communication card must be installed. The HS930 provides four optional communication cards and you can select one based on actual requirements. If the communication protocol is Modbus, PROFIBUS-DP or CANopen, the corresponding serial communication protocol needs to be selected based on the setting of H16.01.

The CANlink protocol is always valid.

7: Simple PLC

When the simple programmable logic controller (PLC) mode is used as the frequency source, the running frequency of the AC drive can be switched over among the 16 frequency references. You can set the holding time and acceleration/deceleration time of the 16 frequency references. For details, refer to the descriptions of Group H10

8: Multi-reference

In multi-reference mode, combinations of different DI terminal states correspond to different set frequencies. The HS930 supports a maximum of 16 speeds implemented by 16 state combinations of four DI terminals (allocated with functions 12 to 15) in Group H10. The multiple references indicate percentages of the value of H00.05 (Maximum frequency).

If a DI terminal is used for the multi-reference function, you need to perform related setting in group H05.

9: Pulse setting (DI5)

The frequency is set by DI5 (high-speed pulse). The signal specification of pulse setting is 9−30 V (voltage range) and 0−100 kHz (frequency range). The corresponding value 100% of pulse setting corresponds to the value of H00.05 (Maximum frequency).

Function Code	Parameter Name	Setting Range	Default
H00.03	Acceleration time 1	0.00−650.00s (H00.19 = 2) 0.0−6500.0s (H00.19 = 1) 0−65000s (H00.19 = 0)	Model dependent
H00.04	Deceleration time 1	0.00−650.00s (H00.19 = 2) 0.0−6500.0s (H00.19 = 1) 0−65000s (H00.19 = 0)	Model dependent

Acceleration time indicates the time required by the AC drive to accelerate from 0 Hz to "Acceleration/Deceleration base frequency" (H00.25), that is, t1 in Figure 6-2.

Deceleration time indicates the time required by the AC drive to decelerate from "Acceleration/Deceleration base frequency" (H00.25) to 0 Hz, that is, t2 in Figure 6-2.

Figure 6-2 Acceleration/Deceleration time

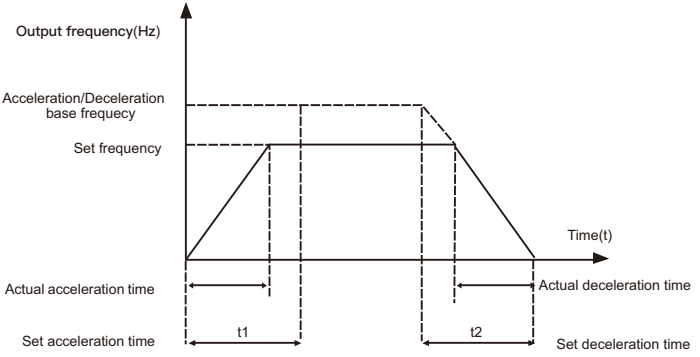

The HS930 provides totally four groups of acceleration/deceleration time for selection. You can perform switchover by using a DI terminal.

Group 1: H00.03, H00.04

Group 2: H08.00, H08.01

Group 3: H08.02, H08.03

Group 4: H08.04, H08.05

www.hars-vfd.com

Function Code	Parameter Name	Setting Range	Default
H00.05	Maximum frequency	50.00–320.00 Hz	50.00 Hz

When the frequency source is AI, pulse setting (DI5), or multi-reference, 100% of the input corresponds to the value of this parameter.

The output frequency of the HS930 can reach up to 3200 Hz. To take both frequency reference resolution and frequency input range into consideration, you can set the number of decimal places for frequency reference in H00.22.

If H00.22 is set to 1, the frequency reference resolution is 0.1 Hz. In this case, the setting range of H00.05 is 50.0 to 3200.0 Hz.

If H00.22 is set to 2, the frequency reference resolution is 0.01 Hz. In this case, the setting range of H00.05 is 50.00 to 320.00 Hz.

Note

After the value of H00.22 is modified, the frequency resolution of all frequency related function codes change accordingly.

Function Code	Parameter Name	Setting Range	Default
H00.06	Frequency upper limit	Frequency lower limit (H00.07) to maximum frequency (H00.05)	50.00 Hz

This parameter is used to set the frequency upper limit.

Function Code	Parameter Name	Setting Range	Default
H00.07	Frequency lower limit	0.00 Hz to frequency upper limit (H00.06)	0.00 Hz

If the frequency reference is lower than the value of this parameter, the AC drive can stop, run at the frequency lower limit, or run at zero speed, determined by H08.14

Function Code	Parameter Name	Setting Range	Default
H00.09	Rotation direction	0: Same direction 1: Reverse direction	0

You can change the rotation direction of the motor just by modifying this parameter without changing the motor wiring. Modifying this parameter is equivalent to exchanging any two of the motor's U, V, W wires.

Function Code	Parameter Name	Setting Range	Default
H00.10	Motor 1 control mode	0: Sensorless flux vector control (SFVC) 1: Voltage/Frequency (V/F) control 2: Closed-loop vector control (CLVC)	0

0: Sensorless flux vector control (SFVC)

It indicates open-loop vector control, and is applicable to high-performance control applications such as machine tool, centrifuge, wire drawing machine and injection moulding machine. One AC drive can operate only one motor.

1: Voltage/Frequency (V/F) control

It is applicable to applications with low load requirements or applications where one AC drive operates multiple motors, such as fan and pump.

2: Closed-loop vector control (CLVC)

It is applicable to high-accuracy speed control or torque control applications such as high-speed paper making machine, crane and elevator. One AC drive can operate only one motor. An encoder must be installed at the motor side, and a PG card matching the encoder must be installed at the AC drive side.

Function Code	Parameter Name	Setting Range	Default
H00.11	Carrier frequency	0.5–16.0 kHz	Model dependent

It is used to adjust the carrier frequency of the AC drive, helping to reduce the motor noise, avoiding the resonance of the mechanical system, and reducing the leakage current to the earth and interference generated by the AC drive.

If the carrier frequency is low, output current has high harmonics, and the power loss and temperature rise of the motor increase.

If the carrier frequency is high, power loss and temperature rise of the motor declines. However, the AC drive has an increase in power loss, temperature rise and interference.

Adjusting the carrier frequency will exert influences on the aspects listed in the following table.

Table 6-1 Influences of carrier frequency adjustment

Carrier frequency	Low	→	High
Motor noise	Large	→	Small
Output current waveform	Bad	→	Good
Motor temperature rise	High	→	Low
AC drive temperature rise	Low	→	High
Leakage current	Small	→	Large
External radiation interference	Small	→	Large

The factory setting of carrier frequency varies with the AC drive power. If you need to modify the carrier frequency, note that if the set carrier frequency is higher than factory setting, it will lead to an increase in temperature rise of the AC drive's heatsink. In this case, you need to de-rate the AC drive. Otherwise, the AC drive may overheat and alarm.

Function Code	Parameter Name	Setting Range	Default
H00.12	Carrier frequency adjustment with temperature	0: No 1: Yes	1

It is used to set whether the carrier frequency is adjusted based on the temperature. The AC drive automatically reduces the carrier frequency when detecting that the heatsink temperature is high. The AC drive resumes the carrier frequency to the set value when the

heatsink temperature becomes normal. This function reduces the overheat alarms.

Function Code	Parameter Name	Setting Range	Default
H00.13	Restore default settings	0: No operation 1: Restore factory settings except motor parameters 2: Clear records 4: Restore user backup parameters	0

1: Restore default settings except motor parameters

If H00.13 is set to 1, most function codes are restored to the default settings except motor parameters, frequency reference resolution (H00.22), fault records, accumulative running time (H07.11), accumulative power-on time (H07.13) and accumulative power consumption (H07.14).

2: Clear records

If H00.13 is set to 2, the fault records, accumulative running time (H07.11), accumulative power-on time (H07.13) and accumulative power consumption (H07.14) are cleared.

4: Restore user backup parameters

If H00.13 is set to 4, the previous backup user parameters are restored.

Function Code	Parameter Name	Setting Range	Default
H00.14	G/P type display	1: G type (constant torque load) 2: P type (variable torque load e.g. fan and pump)	Model dependent

This parameter is used to display the delivered model and cannot be modified.

1: Applicable to constant torque load with rated parameters specified

2: Applicable to variable torque load (fan and pump) with rated parameters specified

Note

If vector control is used, motor auto-tuning must be performed because the advantages of vector control can only be utilized after correct motor parameters are obtained. Better performance can be achieved by adjusting speed regulator parameters in group H03 (or groups H19, H20, and H21 respectively for motor 2, 3, and 4).

For the permanent magnetic synchronous motor (PMSM), the HS930 does not support SFVC.

Function Code	Parameter Name	Setting Range	Default
H00.15	Auxiliary frequency source Y selection	0: Digital setting (non-retentive at power failure) 1: Digital setting (retentive at power failure) 2: AI1 3: AI2 4: AI3 5: PID 6: Communication setting 7: Simple PLC 8: Multi-reference 9: Pulse setting(DI5)	0

When used as an independent frequency input channel (frequency source switched over from X to Y), the auxiliary frequency source Y is used in the same way as the main frequency source X (refer to H00.02).

When the auxiliary frequency source is used for operation (frequency source is "X and Y operation"), pay attention to the following aspects:

1) If the auxiliary frequency source Y is digital setting, the preset frequency (H00.00) does not take effect. You can directly adjust the set main frequency by pressing keys △ and ▽ on the operation panel (or using the UP/DOWN function of input terminals).

2) If the auxiliary frequency source is analog input (AI1, AI2 and AI3) or pulse setting, 100% of the input corresponds to the range of the auxiliary frequency Y (set in H00.16 and H00.17)

3) If the auxiliary frequency source is pulse setting, it is similar to analog input.

Note

The main frequency source X and auxiliary frequency source Y must not use the same channel. That is, H00.02 and H00.15 cannot be set to the same value.

Function Code	Parameter Name	Setting Range	Default
H00.16	Range of auxiliary frequency Y for X and Y operation	0: Relative to maximum frequency 1: Relative to main frequency X	0
H00.17	Range of auxiliary frequency Y for X and Y operation	0%–150%	0

If X and Y operation is used, H00.16 and H00.17 are used to set the adjustment range of the auxiliary frequency source.

You can set the auxiliary frequency to be relative to either maximum frequency or main frequency X. If relative to main frequency X, the setting range of the auxiliary frequency Y varies according to the main frequency X.

Function Code	Parameter Name	Setting Range	Default
H00.18	Frequency source selection	Unit's digit (Frequency source selection) 0: Main frequency source X 1: X and Y operation (operation relationship determined by ten's digit) 2: Switchover between X and Y 3: Switchover between X and "X and Y operation" 4: Switchover between Y and "X and Y operation" Ten's digit (X and Y operation relationship) 0: X+Y 1: X-Y 2: Maximum 3: Minimum	0

It is used to select the frequency setting channel. If the frequency source involves X and Y operation, you can set the frequency offset in H00.21 for superposition to the X and Y operation result, flexibly satisfying various requirements.

Figure 6-1 Frequency setting based on main frequency source X and auxiliary frequency source Y

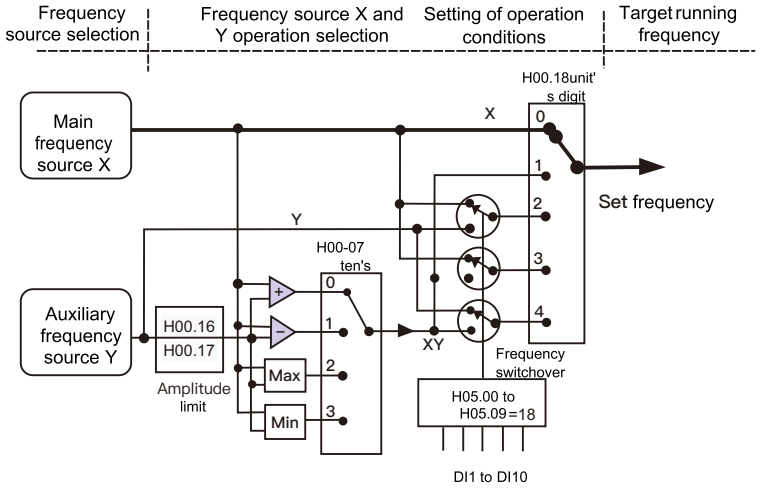

Note

The motor will resume running in the original direction after parameter initialization. Do not use this function in applications where changing the rotating direction of the motor is prohibited after system commissioning is complete.

Function Code	Parameter Name	Setting Range	Default
H00.19	Acceleration/Deceleration time unit	0:1s 1: 0.1s 2: 0.01s	1

To satisfy requirements of different applications, the HS930 provides three acceleration/deceleration time units, 1s, 0.1s and 0.01s.

Note

Modifying this parameter will make the displayed decimal places change and corresponding acceleration/deceleration time also change.

Function Code	Parameter Name	Setting Range	Default
H00.21	Frequency offset of auxiliary frequency source for X and Y operation	0.00 Hz to maximum frequency (H00.05)	0.00 Hz

This parameter is valid only when the frequency source is set to "X and Y operation". The final frequency is obtained by adding the frequency offset set in this parameter to the X and Y operation result.

Function Code	Parameter Name	Setting Range	Default
H00.22	Frequency reference resolution	1: 0.1 Hz 2: 0.01 Hz	2

It is used to set the resolution of all frequency-related parameters.

If the resolution is 0.1 Hz, the HS930can output up to 3200 Hz. If the resolution is 0.01 Hz, the HS930can output up to 600.00 Hz.

Note

Modifying this parameter will make the decimal places of all frequency-related parameters change and corresponding frequency values change.

This parameter is not resumed when factory setting is resumed.

Function Code	Parameter Name	Setting Range	Default
H00.23	Frequency upper limit offset	0.00 Hz to maximum frequency (H00.05)	0.00 Hz

If the source of the frequency upper limit is analog input or pulse setting, the final frequency upper limit is obtained by adding the offset in this parameter to the frequency upper limit set in H00.28.

Function Code	Parameter Name	Setting Range	Default
H00.24	Motor parameter group selection	0: Motor parameter group 1 1: Motor parameter group 2 2: Motor parameter group 3 3: Motor parameter group 4	0

The HS930 can drive four motors at different time. You can set the motor nameplate parameters respectively, independent motor auto-tuning, different control modes, and parameters related to running performance respectively for the four motors.

Motor parameter group 1 corresponds to groups H02 and H03. Motor parameter groups 2, 3 and 4 correspond to groups H19, H20 and H21 respectively.

You can select the current motor parameter group by using H00.24 or perform switchover between the motor parameter groups by means of a DI terminal. If motor parameters selected by means of H00.24 conflict with those selected by means of DI terminal, the selection by DI is preferred.

Function Code	Parameter Name	Setting Range	Default
H00.25	Acceleration/Deceleration time base frequency	0: Maximum frequency (H00.05) 1: Set frequency 2: 100 Hz	0

The acceleration/deceleration time indicates the time for the AC drive to increase from 0 Hz to the frequency set in H00.25. If this parameter is set to 1, the acceleration/deceleration time is related to the set frequency. If the set frequency changes frequently, the motor's acceleration/deceleration also changes.

Function Code	Parameter Name	Setting Range	Default
H00.26	Base frequency for UP/DOWN modification during running	0: Running frequency 1: Set frequency	0

This parameter is valid only when the frequency source is digital setting.

It is used to set the base frequency to be modified by using keys △ and ▽ or the terminal UP/DOWN function. If the running frequency and set frequency are different, there will be a large difference between the AC drive's performance during the acceleration/deceleration process.

Function Code	Parameter Name	Setting Range	Default
H00.27	Binding command source to frequency source	Unit's digit (Binding operation panel command to frequency source) 0: No binding 1: Frequency source by digital setting 2: AI1 3: AI2 4: AI3 5: Pulse setting (DI5) 6: Multi-reference 7: Simple PLC 8: PID 9: Communication setting Ten's digit (Binding terminal command to frequency source) 0–9, same as unit's digit Hundred's digit (Binding communication command to frequency source) 0–9, same as unit's digit)	000

It is used to bind the three running command sources with the nine frequency sources, facilitating to implement synchronous switchover.

For details on the frequency sources, see the description of H00.02 (Main frequency source X selection). Different running command sources can be bound to the same frequency source.

If a command source has a bound frequency source, the frequency source set in H00.02 to H00.18 no longer takes effect when the command source is effective.

Function Code	Parameter Name	Setting Range	Default
H00.28	Source of frequency upper limit	0: Set by H00.06 1: AI1 2: AI2 3: AI3 4: Pulse setting (DI5) 5: Communication setting	0

It is used to set the source of the frequency upper limit, including digital setting (H00.06), AI, pulse setting or communication setting. If the frequency upper limit is set by means of AI1, AI2, AI3, DI5 or communication, the setting is similar to that of the main frequency source X. For details, see the description of H00.02.

For example, to avoid runaway in torque control mode in winding application, you can set the frequency upper limit by means of analog input. When the AC drive reaches the upper limit, it will continue to run at this speed..

Group H01: Start/Stop Control

Function Code	Parameter Name	Setting Range	Default
H01.00	Start mode	0: Direct start 1: Rotational speed tracking restart 2: Pre-excited start (asynchronous motor)	0

0: Direct start

If the DC braking time is set to 0, the AC drive starts to run at the startup frequency.

If the DC braking time is not 0, the AC drive performs DC braking first and then starts to run at the startup frequency. It is applicable to small-inertia load application where the motor is likely to rotate at startup.

1: Rotational speed tracking restart

The AC drive judges the rotational speed and direction of the motor first and then starts at the tracked frequency. Such smooth start has no impact on the rotating motor. It is applicable to the restart upon instantaneous power failure of large-inertia load. To

ensure the performance of rotational speed tracking restart, set the motor parameters in group H02 correctly.

2: Pre-excited start (asynchronous motor)

It is valid only for asynchronous motor and used for building the magnetic field before the motor runs. For pre-excited current and pre-excited time, see parameters of H01.03 and H01.04.

If the pre-excited time is 0, the AC drive cancels pre-excitation and starts to run at startup frequency.

If the pre-excited time is not 0, the AC drive pre-excites first before startup, improving the dynamic response of the motor.

Function Code	Parameter Name	Setting Range	Default
H01.01	Startup frequency	0.00–10.00 Hz	0.00 Hz
H01.02	Startup frequency holding time	0.0–100.0s	0.0s

To ensure the motor torque at AC drive startup, set a proper startup frequency. In addition, to build excitation when the motor starts up, the startup frequency must be held for a certain period.

The startup frequency (H01.01) is not restricted by the frequency lower limit. If the set target frequency is lower than the startup frequency, the AC drive will not start and stays in the standby state.

During switchover between forward rotation and reverse rotation, the startup frequency holding time is disabled. The holding time is not included in the acceleration time but in the running time of simple PLC.

Example 1:

H00.02 = 0	The frequency source is digital setting.
H00.00 = 2.00 Hz	The digital setting frequency is 2.00 Hz.
H01.01 = 5.00 Hz	The startup frequency is 5.00 Hz.
H01.02 = 2.0s	The startup frequency holding time is 2.0s.

In this example, the AC drive stays in the standby state and the output frequency is 0.00 Hz.

Example 2:

H00.03=0	The frequency source is digital setting.
H00.00= 10.0 0 Hz	The digital setting frequency is 10.00 Hz.
H01.01= 5.00 Hz	The startup frequency is 5.00 Hz.
H01.02 = 2.0s	The startup frequency holding time is 2.0s.

In this example, the AC drive accelerates to 5.00 Hz, and then accelerates to the set frequency 10.00 Hz after 2s.

Function Code	Parameter Name	Setting Range	Default
H01.03	Startup DC braking current/Pre-excited current	0%–100%	0%
H01.04	Startup DC braking time/Pre-excited time	0.0–100.0s	0.0s

Startup DC braking is generally used during restart of the AC drive after the rotating motor stops. Pre-excitation is used to make the AC drive build magnetic field for the asynchronous motor before startup to improve the responsiveness.

Startup DC braking is valid only for direct start (H01.00 = 0). In this case, the AC drive performs DC braking at the set startup DC braking current. After the startup DC braking time, the AC drive starts to run. If the startup DC braking time is 0, the AC drive starts directly without DC braking. The larger the startup DC braking current is, the larger the braking force is.

If the startup mode is pre-excited start (H01.00 = 2), the AC drive builds magnetic field based on the set pre-excited current. After the pre-excited time, the AC drive starts to run. If the pre-excited time is 0, the AC drive starts directly without pre-excitation.

The startup DC braking current or pre-excited current is a percentage relative to the base value.

If the rated motor current is less than or equal to 80% of the rated AC drive current, the base value is the rated motor current.

If the rated motor current is greater than 80% of the rated AC drive current, the base value is 80% of the rated AC drive current.

Function Code	Parameter Name	Setting Range	Default
H01.05	Stop mode	0: Decelerate to stop 1: Coast to stop	0

0: Decelerate to stop

After the stop command is enabled, the AC drive decreases the output frequency according to the deceleration time and stops when the frequency decreases to zero.

1: Coast to stop

After the stop command is enabled, the AC drive immediately stops the output. The motor will coast to stop based on the mechanical inertia.

Function Code	Parameter Name	Setting Range	Default
H01.06	Initial frequency of stop DC braking	0.00 Hz to maximum frequency	0.00 Hz
H01.07	Waiting time of stop DC braking	0.0–36.0s	0.0s
H01.08	Stop DC braking current	0%–100%	0%
H01.09	Stop DC braking time	0.0–36.0s	0.0s

H01.06 (Initial frequency of stop DC braking)

During the process of decelerating to stop, the AC drive starts DC braking when the running frequency is lower than the value set in H01.06.

H01.07 (Waiting time of stop DC braking)

When the running frequency decreases to the initial frequency of stop DC braking, the AC drive stops output for a certain period and then starts DC braking. This prevents faults such as overcurrent caused due to DC braking at high speed.

H01.08 (Stop DC braking current)

This parameter specifies the output current at DC braking and is a percentage relative to the base value.

If the rated motor current is less than or equal to 80% of the rated AC drive current, the base value is the rated motor current.

If the rated motor current is greater than 80% of the rated AC drive current, the base value is 80% of the rated AC drive current.

H01.09 (Stop DC braking time)

This parameter specifies the holding time of DC braking. If it is set to 0, DC braking is cancelled.

The stop DC braking process is shown in the following figure.

Figure 6-14 Stop DC braking process

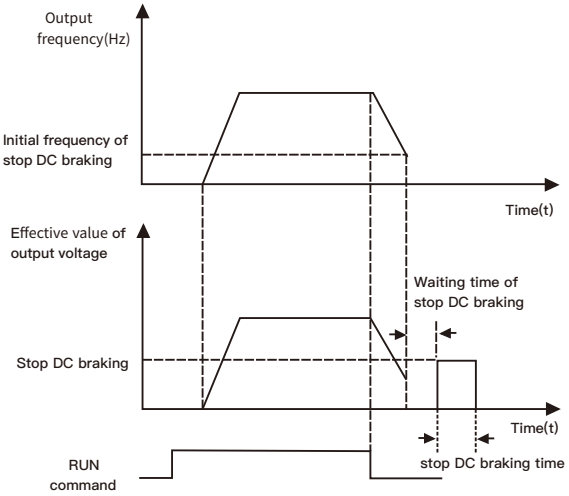

Function Code	Parameter Name	Setting Range	Default
H01.10	Acceleration/ Deceleration mode	0: Linear acceleration/deceleration 1: S-curve acceleration/deceleration A 2: S-curve acceleration/deceleration B	0

It is used to set the frequency change mode during the AC drive start and stop process.

0: Linear acceleration/deceleration

The output frequency increases or decreases in linear mode. The HS930 provides four group of acceleration/deceleration time, which can be selected by using H05.00 to H05-08.

1: S-curve acceleration/deceleration A

The output frequency increases or decreases along the S curve. This mode is generally used in the applications where start and stop processes are relatively smooth, such as elevator and conveyor belt. H01.11 and H01.12 respectively define the time proportions of the start segment and the end segment.

2: S-curve acceleration/deceleration B

In this curve, the rated motor frequency f_b is always the inflexion point. This mode is usually used in applications where acceleration/deceleration is required at the speed higher than the rated frequency.

When the set frequency is higher than the rated frequency, the

acceleration/ deceleration time is: $t = (\frac{4}{9} \times (\frac{f}{f_b})^2 + \frac{5}{9}) \times T$

In the formula, f is the set frequency, f_b is the rated motor frequency and T is the acceleration time from 0 Hz to f_b.

Function Code	Parameter Name	Setting Range	Default
H01.11	Time proportion of S-curve start segment	0.0% to (100.0% − H01.12)	30.0%
H01.12	Time proportion of S-curve end segment	0.0% to (100.0% − H01.11)	30.0%

These two parameters respectively define the time proportions of the start segment and the end segment of S-curve acceleration/deceleration. They must satisfy the requirement: H01-08 + H01.12 ≤100.0%.

In Figure 6-12, t1 is the time defined in H01.11, within which the slope of the output frequency change increases gradually. t2 is the time defined in H01.12, within which the slope of the output frequency change gradually decreases to 0. Within the time between t1

and t2, the slope of the output frequency change remains unchanged, that is, linear acceleration/ deceleration.

Figure 6-12 S-curve acceleration/deceleration A

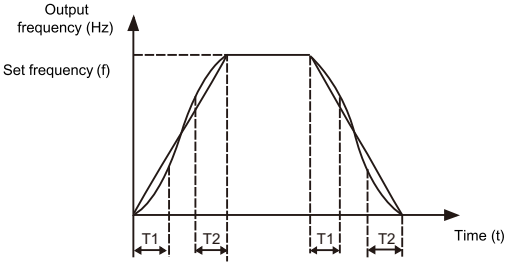

Figure 6-13 S-curve acceleration/deceleration B

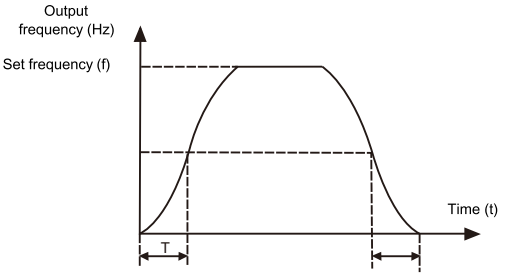

Function Code	Parameter Name	Setting Range	Default
H01.13	Brake use ratio	0%–100%	100%

It is valid only for the AC drive with internal braking unit and used to adjust the duty ratio of the braking unit. The larger the value of this parameter is, the better the braking result will be. However, too larger value causes great fluctuation of the AC drive bus voltage during the braking process.

Function Code	Parameter Name	Setting Range	Default
H01.14	Rotational speed tracking mode	0: From frequency at stop 1: From zero speed 2: From maximum frequency	0

To complete the rotational speed tracking process within the shortest time, select the proper mode in which the AC drive tracks the motor rotational speed.

0: From frequency at stop

It is the commonly selected mode.

1: From zero frequency

It is applicable to restart after a long time of power failure.

2: From the maximum frequency

It is applicable to the power-generating load.

Function Code	Parameter Name	Setting Range	Default
H01.15	Rotational speed tracking speed	1–100	20

In the rotational speed tracking restart mode, select the rotational speed tracking speed.
The larger the value is, the faster the tracking is. However, too large value may cause unreliable trackin

Group H02: Motor 1 Parameters

Function Code	Parameter Name	Setting Range	Default
H02.00	Motor type selection	0: Common asynchronous motor 1: Variable frequency asynchronous motor 2: Permanent magnetic synchronous motor	1
H02.01	Rated motor power	0.1–1000.0 kW	Model dependent
H02.02	Rated motor voltage	1–2000 V	Model dependent
H02.03	Rated motor current	0.01–655.35 A (AC drive power ≤ 55 kW) 0.1–6553.5 A (AC drive power > 55 kW)	Model dependent
H02.04	Rated motor frequency	0.01 Hz to maximum frequency	Model dependent
H02.05	Rated motor rotational speed	1–65535 RPM	Model dependent

Set the parameters according to the motor nameplate no matter whether V/F control or vector control is adopted.

To achieve better V/F or vector control performance, motor auto-tuning is required. The motor auto-tuning accuracy depends on the correct setting of motor nameplate parameters.

Function Code	Parameter Name	Setting Range	Default
H02.06	Stator resistance (asynchronous motor)	0.001–65.535 Ω (AC drive power ≤ 55 kW) 0.0001–6.5535 Ω (AC drive power > 55 kW)	Model dependent
H02.07	Rotor resistance (asynchronous motor)	0.001–65.535 Ω (AC drive power ≤ 55 kW) 0.0001–6.5535 Ω (AC drive power > 55 kW)	Model dependent
H02.08	Leakage inductive reactance (asynchronous motor)	0.01–655.35 mH (AC drive power ≤ 55 kW) 0.001–65.535 mH (AC drive power > 55 kW)	Model dependent
H02.09	Mutual inductive reactance (asynchronous motor)	0.1–6553.5 mH (AC drive power ≤ 55 kW) 0.01–-655.35 mH (AC drive power > 55 kW)	Model dependent
H02.10	No-load current (asynchronous motor)	0.01 to H02.03 (AC drive power ≤ 55 kW) 0.1 to H02.03 (AC drive power > 55 kW)	Model dependent

The parameters in H02.06 to H02.10 are asynchronous motor parameters. These parameters are unavailable on the motor nameplate and are obtained by means of motor auto-tuning. Only H02.06 to H02.08 can be obtained through static motor auto-tuning. Through complete motor auto-tuning, encoder phase sequence and current loop PI can be obtained besides the parameters in H02.06 to H02.10.

Each time "Rated motor power" (H02.01) or "Rated motor voltage" (H02.02) is changed, the AC drive automatically restores values of H02.06 to H02.10 to the parameter setting for the common standard Y series asynchronous motor.

If it is impossible to perform motor auto-tuning onsite, manually input the values of these parameters according to data provided by the motor manufacturer.

Function Code	Parameter Name	Setting Range	Default
H02-16	Stator resistance (synchronous motor)	0.001–65.535 Ω (AC drive power ≤ 55 kW) 0.0001–6.5535 Ω (AC drive power > 55 kW)	Model dependent
H02-17	Shaft D inductance (synchronous motor)	0.01–655.35 mH (AC drive power ≤ 55 kW) 0.001–65.535 mH (AC drive power > 55 kW)	Model dependent
H02-18	Shaft Q inductance (synchronous motor)	0.01–655.35 mH (AC drive power ≤ 55 kW) 0.001–65.535 mH (AC drive power > 55 kW)	Model dependent
H02-20	Back EMF (synchronous motor)	0.1–6553.5 V	Model dependent

H02-16 to H02.20 are synchronous motor parameters. These parameters are unavailable on

the nameplate of most synchronous motors and can be obtained by means of "Synchronous motor no-load auto-tuning". Through "Synchronous motor with-load auto-tuning", only the encoder phase sequence and installation angle can be obtained.

Each time "Rated motor power" (H02.01) or "Rated motor voltage" (H02.02) is changed, the AC drive automatically modifies the values of H02-16 to H02-20.

You can also directly set the parameters based on the data provided by the synchronous motor manufacturer.

Function Code	Parameter Name	Setting Range	Default
H02.27	Encoder pulses per revolution	1–65535	1024

This parameter is used to set the pulses per revolution (PPR) of ABZ or UVW incremental encoder. In CLVC mode, the motor cannot run properly if this parameter is set incorrectly.

Function Code	Parameter Name	Setting Range	Default
H02.28	Encoder type	0: ABZ incremental encoder 1: UVW incremental encoder 2: Resolver 3: SIN/COS encoder 4: Wire-saving UVW encoder	0

The HS930 supports multiple types of encoder. Different PG cards are required for different types of encoder. Select the appropriate PG card for the encoder used. Any of the five encoder types is applicable to synchronous motor. Only ABZ incremental encoder and resolver are applicable to asynchronous motor.

After installation of the PG card is complete, set this parameter properly based on the actual condition. Otherwise, the AC drive cannot run properly.

Function Code	Parameter Name	Setting Range	Default
H02.30	A/B phase sequence of ABZ incremental encoder	0: Forward 1: Reserve	0

This parameter is valid only for ABZ incremental encoder (H02.28 = 0) and is used to set the A/B phase sequence of the ABZ incremental encoder.

It is valid for both asynchronous motor and synchronous motor. The A/B phase sequence can be obtained through "Asynchronous motor complete auto-tuning" or "Synchronous motor no-load auto-tuning".

Function Code	Parameter Name	Setting Range	Default
H02.31	Encoder installation angle	0.0 – 359.9℃	0.0℃

This parameter is applicable only to synchronous motor. It is valid for ABZ incremental encoder, UVW incremental encoder, resolver and wire-saving UVW encoder, but invalid for SIN/COS encoder.

It can be obtained through synchronous motor no-load auto-turning or with-load auto-tuning. After installation of the synchronous motor is complete, the value of this parameter must be obtained by motor auto-tuning. Otherwise, the motor cannot run properly.

Function Code	Parameter Name	Setting Range	Default

H02.32	U, V, W phase sequence of UVW encoder	0: Forward 1: Reverse	0
H02.33	UVW encoder angle offset	0.0 – 359.9℃	0.0℃

These two parameters are valid only when the UVW encoder is applied to a synchronous motor. They can be obtained by synchronous motor no-load auto-tuning or with-load autotuning. After installation of the synchronous motor is complete, the values of these two parameters must be obtained by motor auto-tuning. Otherwise, the motor cannot run properly.

Function Code	Parameter Name	Setting Range	Default
H02.34	Number of pole pairs of resolver	1–65535	1

If a resolver is applied, set the number of pole pairs properly.

Function Code	Parameter Name	Setting Range	Default
H02-36	Encoder wire-break fault detection time	0.0s: No action 0.1–10.0s	0.0s

This parameter is used to set the time that a wire-break fault lasts. If it is set to 0.0s, the AC drive does not detect the encoder wire-break fault. If the duration of the encoder wire-break fault detected by the AC drive exceeds the time set in this parameter, the AC drive reports E020.

Function Code	Parameter Name	Setting Range	Default
H02.37	Auto-tuning selection	0: No auto-tuning 1: Asynchronous motor static auto-tuning 2: Asynchronous motor complete auto-tuning 11: Synchronous motor with-load auto-tuning 12: Synchronous motor no-load auto-tuning	0

0: No auto-tuning

Auto-tuning is prohibited.

1: Asynchronous motor static auto-tuning

It is applicable to scenarios where complete auto-tuning cannot be performed because the asynchronous motor cannot be disconnected from the load.

Before performing static auto-tuning, properly set the motor type and motor nameplate parameters of H02.00 to H02.05 first. The AC drive will obtain parameters of H02.06 to H02.08 by static auto-tuning.

Set this parameter to 1, and press "RUN". Then, the AC drive starts static auto-tuning.

2: Asynchronous motor complete auto-tuning

To perform this type of auto-tuning, ensure that the motor is disconnected from the load. During the process of complete auto-tuning, the AC drive performs static auto- tuning first and then accelerates to 80% of the rated motor frequency within the acceleration time set in H00.03. The AC drive keeps running for a certain period and then decelerates to stop within deceleration time set in H00.04.

Before performing complete auto-tuning, properly set the motor type, motor nameplate parameters of H02.00 to H02.05, "Encoder type" (H02.28) and "Encoder pulses per revolution" (H02.27) first.

The AC drive will obtain motor parameters of H02.06 to H02.10, "A/B phase sequence of ABZ incremental encoder" (H02.30) and vector control current loop PI parameters of H03.13 to H03.16 by complete auto-tuning.

Set this parameter to 2, and press " RUN . Then, the AC drive starts complete autotuning.

11: Synchronous motor with-load auto-tuning

It is applicable to scenarios where the synchronous motor cannot be disconnected from the load. During with-load auto-tuning, the motor rotates at the speed of 10 PRM.

Before performing with-load auto-tuning, properly set the motor type and motor nameplate parameters of H02.00 to H02.05 first.

By with-load auto-tuning, the AC drive obtains the initial position angle of the synchronous motor, which is a necessary prerequisite of the motor's normal running. Before the first use of the synchronous motor after installation, motor auto-tuning must be performed.

Set this parameter to 11, and press " RUN . Then, the AC drive starts with-load auto-tuning.

12: Synchronous motor no-load auto-tuning

If the synchronous motor can be disconnected from the load, no-load auto-tuning is recommended, which will achieve better running performance compared with with-load auto-tuning.

During the process of no-load auto-tuning, the AC drive performs with-load auto-tuning first and then accelerates to 80% of the rated motor frequency within the acceleration time set in H00.03. The AC drive keeps running for a certain period and then decelerates to stop within the deceleration time set in H00.04.

Before performing no-load auto-tuning, properly set the motor type, motor nameplate parameters of H02.00 to H02.05, "Encoder type" (H02.28) and "Encoder pulses per revolution" (H02.27) and "Number of pole pairs of resolver" (H02.34) first.

The AC drive will obtain motor parameters of H02.16 to H02.20 encoder related parameters of H02.30 to H02.33 and vector control current loop PI parameters of H03.13 to H03.16 by no-load auto-tuning.

Set this parameter to 12, and press RUN . Then, the AC drive starts no-load auto-tuning.

Note

Motor auto-tuning can be performed only in operation panel mode.

Group H03: Vector Control Parameters

Group H03 is valid for vector control, and invalid for V/F control.

Function Code	Parameter Name	Setting Range	Default
H03.00	Speed loop proportional gain 1	0–100	30
H03.01	Speed loop integral time 1	0.01–10.00s	0.50s
H03.02	Switchover frequency 1	0.00 to H03.05	5.00 Hz
H03.03	Speed loop proportional gain 2	0–100	20
H03.04	Speed loop integral time 2	0.01–10.00s	1.00s
H03.05	Switchover frequency 2	H03.02 to maximum output frequency	10.00 Hz

Speed loop PI parameters vary with running frequencies of the AC drive.

If the running frequency is less than or equal to "Switchover frequency 1" (H03.02), the speed loop PI parameters are H03.00 and H03.01.

If the running frequency is equal to or greater than "Switchover frequency 2" (H03.05), the speed loop PI parameters are H03.03 and H03.04.

If the running frequency is between H03.02 and H03.05, the speed loop PI parameters are obtained from the linear switchover between the two groups of PI parameters, as shown in Figure 6-3.

Figure 6-3 Relationship between running frequencies and PI parameters

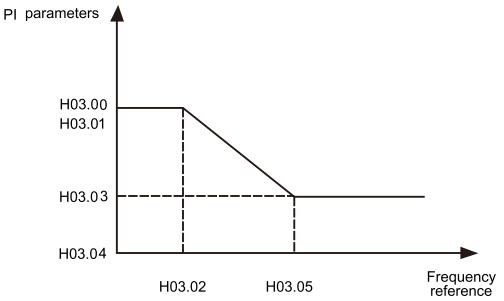

The speed dynamic response characteristics in vector control can be adjusted by setting the proportional gain and integral time of the speed regulator.

To achieve a faster system response, increase the proportional gain and reduce the integral time. Be aware that this may lead to system oscillation.

The recommended adjustment method is as follows:

If the factory setting cannot meet the requirements, make proper adjustment. Increase the proportional gain first to ensure that the system does not oscillate, and then reduce the integral time to ensure that the system has quick response and small overshoot.

Note

Improper PI parameter setting may cause too large speed overshoot, and overvoltage fault may even occur when the overshoot drops.

Function Code	Parameter Name	Setting Range	Default
H03.06	Vector control slip gain	50%–200%	100%

For SFVC, it is used to adjust speed stability accuracy of the motor. When the motor with load runs at a very low speed, increase the value of this parameter; when the motor with load runs at a very large speed, decrease the value of this parameter.

For CLVC, it is used to adjust the output current of the AC drive with same load.

Function Code	Parameter Name	Setting Range	Default
H03.07	Time constant of speed loop filter	0.000–0.100s	0.000s

In the vector control mode, the output of the speed loop regulator is torque current reference. This parameter is used to filter the torque references. It need not be adjusted generally and can be increased in the case of large speed fluctuation. In the case of motor oscillation, decrease the value of this parameter properly.

If the value of this parameter is small, the output torque of the AC drive may fluctuate greatly, but the response is quick.

Function Code	Parameter Name	Setting Range	Default
H03.08	Vector control over-excitation gain	0–200	64

During deceleration of the AC drive, over-excitation control can restrain rise of the bus voltage to avoid the overvoltage fault. The larger the over-excitation gain is, the better the restraining effect is.

Increase the over-excitation gain if the AC drive is liable to overvoltage error during deceleration. Too large over-excitation gain, however, may lead to an increase in output current. Therefore, set this parameter to a proper value in actual applications.

Set the over-excitation gain to 0 in applications of small inertia (the bus voltage will not rise during deceleration) or where there is a braking resistor.

Function Code	Parameter Name	Setting Range	Default
H03.09	Torque upper limit source in speed control mode	0: H03.10 1: AI1 2: AI2 3: AI3 4: Pulse setting (DI5) 5: Communication setting	0
H03.10	Digital setting of torque upper limit in speed control mode	0.0%–200.0%	150.0%

In the speed control mode, the maximum output torque of the AC drive is restricted by H03.09 If the torque upper limit is analog, pulse or communication setting, 100% of the setting corresponds to the value of H03.10, and 100% of the value of H03.10 corresponds to the AC drive rated torque.

For details on the AI1, AI2 and AI3 setting, see the description of the AI curves in group H05. For details on the pulse setting, see the description of H05.27 to H05.31.
When the AC drive is in communication with the master, if H03.09 is set to 5 communication setting , H03.10 Digital setting of torque upper limit in speed control mode can be set via communication from the master.

In other conditions, the host computer writes data -100.00% to 100.00% by the communication address 0x1000, where 100.0% corresponds to the value of H03.10. The communication protocol can be Modbus, CANopen, CANlink or PROFIBUS-DP.

Function Code	Parameter Name	Setting Range	Default
H03.13	Excitation adjustment proportional gain	0–20000	2000
H03.14	Excitation adjustment integral gain	0–20000	1300
H03.15	Torque adjustment proportional gain	0–20000	2000
H03.16	Torque adjustment integral gain	0–20000	1300

These are current loop PI parameters for vector control. These parameters are automatically obtained through "Asynchronous motor complete auto-tuning" or "Synchronous motor noload auto-tuning", and need not be modified.

The dimension of the current loop integral regulator is integral gain rather than integral time.

Note that too large current loop PI gain may lead to oscillation of the entire control loop. Therefore, when current oscillation or torque fluctuation is great, manually decrease the proportional gain or integral gain here.

Function Code	Parameter Name	Setting Range	Default
H03.18	Field weakening mode of synchronous motor	0: No field weakening 1: Direct calculation 2: Automatic adjustment	1
H03.19	Field weakening depth of synchronous motor	50%–500%	100%

H03.20	Maximum field weakening current	1%–300%	50%
H03.21	Field weakening automatic adjustment gain	10%–500%	100%
H03.22	Field weakening integral multiple	2–10	2

These parameters are used to set field weakening control for the synchronous motor.

If H03.18 is set to 0, field weakening control on the synchronous motor is disabled. In this case, the maximum rotational speed is related to the AC drive bus voltage. If the motor's maximum rotational speed cannot meet the requirements, enable the field weakening function to increase the speed.

The HS930provides two field weakening modes: direct calculation and automatic adjustment.

In direct calculation mode, directly calculate the demagnetized current and manually adjust the demagnetized current by means of H03.19 The smaller the demagnetized current is, the smaller the total output current is. However, the desired field weakening effect may not be achieved.

In automatic adjustment mode, the best demagnetized current is selected automatically. This may influence the system dynamic performance or cause instability.

The adjustment speed of the field weakening current can be changed by modifying the values of H03.21 and H03.22 A very quick adjustment may cause instability. Therefore, generally do not modify them manually.

Group H04: V/F Control Parameters

Group H04 is valid only for V/F control.

The V/F control mode is applicable to low load applications (fan or pump) or applications where one AC drive operates multiple motors or there is a large difference between the AC drive power and the motor power.

Function Code	Parameter Name	Setting Range	Default
H04.00	V/F curve setting	0: Linear V/F 1: Multi-point V/F 2: Square V/F 3: 1.2-power V/F 4: 1.4-power V/F 6: 1.6-power V/F 8: 1.8-power V/F 9: Reserved 10: V/F complete separation 11: V/F half separation	0

0: Linear V/F

It is applicable to common constant torque load.

1: Multi-point V/F

It is applicable to special load such as dehydrator and centrifuge. Any such V/F curve can be obtained by setting parameters of H04.05 to H04.10.

2: Square V/F

It is applicable to centrifugal loads such as fan and pump.

3 to 8: V/F curve between linear V/F and square V/F

10: V/F complete separation

In this mode, the output frequency and output voltage of the AC drive are independent. The output frequency is determined by the frequency source, and the output voltage is determined by "Voltage source for V/F separation" (H04.13).

It is applicable to induction heating, inverse power supply and torque motor control.

11: V/F half separation

In this mode, V and F are proportional and the proportional relationship can be set in H04.13. The relationship between V and F are also related to the rated motor voltage and rated motor frequency in Group H02.

Assume that the voltage source input is X (0 to 100%), the relationship between V and F is:

V/F = 2 x X x (Rated motor voltage)/(Rated motor frequency)

Function Code	Parameter Name	Setting Range	Default
H04.01	Torque boost	0.0%–30%	Model dependent
H04.02	Cut-off frequency of torque boost	0.00 Hz to maximum output frequency	50.00 Hz

To compensate the low frequency torque characteristics of V/F control, you can boost the output voltage of the AC drive at low frequency by modifying H04.01.

If the torque boost is set to too large, the motor may overheat, and the AC drive may suffer overcurrent.

If the load is large and the motor startup torque is insufficient, increase the value of H04.01. If the load is small, decrease the value of H04.01. If it is set to 0.0, the AC drive performs automatic torque boost. In this case, the AC drive automatically calculates the torque boost value based on motor parameters including the stator resistance.

H04.02 specifies the frequency under which torque boost is valid. Torque boost becomes invalid when this frequency is exceeded, as shown in the following figure.

Figure 6-4 Manual torque boost

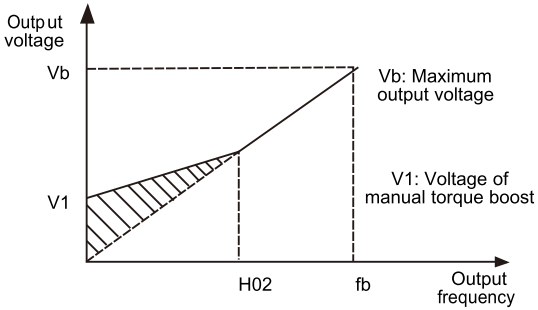

F1: Cutoff frequency of fb: Rated running manual torque boost frequency

Function Code	Parameter Name	Setting Range	Default
H04.05	Multi-point V/F frequency 1 (F1)	0.00 Hz to H04.07	0.00 Hz
H04.06	Multi-point V/F voltage 1 (V1)	0.0%–100.0%	0.0%
H04.07	Multi-point V/F frequency 2 (F2)	H04.05 to H04.09	0.00 Hz
H04.08	Multi-point V/F voltage 2 (V2)	0.0%–100.0%	0.0%
H04.09	Multi-point V/F frequency 3 (F3)	H04.07 to rated motor frequency (H02.04) Note: The rated frequencies of motors 2, 3, and 4 are respectively set in H19.04, H20-04, and H21-04.	0.00 Hz
H04.10	Multi-point V/F voltage 3 (V3)	0.0%–100.0%	0.0%

These six parameters are used to define the multi-point V/F curve.

The multi-point V/F curve is set based on the motor's load characteristic. The relationship between voltages and frequencies is:

V1 < V2 < V3, F1 < F2 < F3

At low frequency, higher voltage may cause overheat or even burnt out of the motor and overcurrent stall or overcurrent protection of the AC drive.

Figure 6-5 Setting of multi-point V/F curve

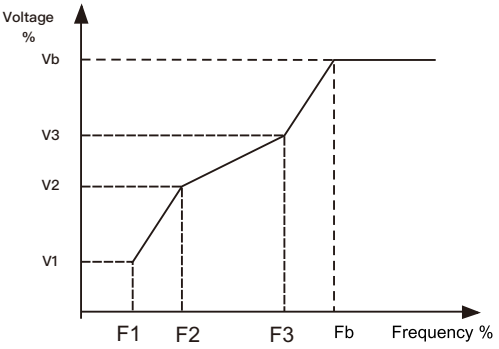

V1-V3: 1st, 2nd and 3rd voltage percentages of multi-point V/F
Vb: Rated motor voltage
F1-F3: 1st, 2nd and 3rd frequency percentages of multi-point V/F
Fb: Rated motor running frequency

Function Code	Parameter Name	Setting Range	Default
H04.03	V/F slip compensation gain	0%–200.0%	0.0%

This parameter is valid only for the asynchronous motor.

It can compensate the rotational speed slip of the asynchronous motor when the load of the motor increases, stabilizing the motor speed in case of load change. If this parameter is set to 100%, it indicates that the compensation when the motor bears rated load is the rated motor slip. The rated motor slip is automatically obtained by the AC drive through calculation based on the rated motor frequency and rated motor rotational speed in group H02.

Generally, if the motor rotational speed is different from the target speed, slightly adjust this parameter.

Function Code	Parameter Name	Setting Range	Default
H04.04	V/F over-excitation gain	0–200	64

During deceleration of the AC drive, over-excitation can restrain rise of the bus voltage, preventing the overvoltage fault. The larger the over-excitation is, the better the restraining result is.

Increase the over-excitation gain if the AC drive is liable to overvoltage error during deceleration. However, too large over-excitation gain may lead to an increase in the output current. Set H04.03 to a proper value in actual applications.

Set the over-excitation gain to 0 in the applications where the inertia is small and the bus voltage will not rise during motor deceleration or where there is a braking resistor.

Function Code	Parameter Name	Setting Range	Default
H04.11	V/F oscillation suppression gain	0–100	Model dependent

Set this parameter to a value as small as possible in the prerequisite of efficient oscillation suppression to avoid influence on V/F control.

Set this parameter to 0 if the motor has no oscillation. Increase the value properly only when the motor has obvious oscillation. The larger the value is, the better the oscillation suppression result will be.

When the oscillation suppression function is enabled, the rated motor current and noload current must be correct. Otherwise, the V/F oscillation suppression effect will not be satisfactory.

Function Code	Parameter Name	Setting Range	Default
H04.13	Voltage source for V/F separation	0: Digital setting (H04.14) 1: AI1 2: AI2 3: AI3 4: Pulse setting (DI5) 5: Multi-reference 6: Simple PLC 7: PID 8: Communication setting 100.0% corresponds to the rated motor voltage (H02.02, H21-02, H22.02 H23.02).	0
H04.14	Voltage digital setting for V/F separation	0 V to rated motor voltage	0 V

V/F separation is generally applicable to scenarios such as induction heating, inverse power supply and motor torque control.

If V/F separated control is enabled, the output voltage can be set in H04.14 or by means of analog, multi-reference, simple PLC, PID or communication. If you set the output voltage by means of non-digital setting, 100% of the setting corresponds to the rated motor voltage. If a negative percentage is set, its absolute value is used as the effective value.

0: Digital setting (H04.14)

The output voltage is set directly in H04.14.

1: AI1; 2: AI2; 3: AI3

The output voltage is set by AI terminals.

4: Pulse setting (DI5)

The output voltage is set by pulses of the terminal DI5.

Pulse setting specification: voltage range 9–30 V, frequency range 0–100 kHz

5: Multi-reference

If the voltage source is multi-reference, parameters in group H05 and H10 must be set to determine the corresponding relationship between setting signal and setting voltage. 100.0% of the multi-reference setting in group H10 corresponds to the rated motor voltage.

6: Simple PLC

If the voltage source is simple PLC mode, parameters in group H10 must be set to determine the setting output voltage.

7: PID

The output voltage is generated based on PID closed loop. For details, see the description of PID in group H09.

8: Communication setting

The output voltage is set by the host computer by means of communication.

The voltage source for V/F separation is set in the same way as the frequency source. For details, see H00.02. 100.0% of the setting in each mode corresponds to the rated motor voltage. If the corresponding value is negative, its absolute value is used.

Function Code	Parameter Name	Setting Range	Default
H04.15	Voltage rise time of V/F separation	0.0–1000.0s	0.0s
H04-16	Voltage decline time of V/F separation	0.0–1000.0s	0.0s

H04.15 indicates the time required for the output voltage to rise from 0 V to the rated motor voltage shown as t1 in the following figure.

H04-16 indicates the time required for the output voltage to decline from the rated motor voltage to 0 V, shown as t2 in the following figure.

Figure 6-6 Voltage of V/F separation

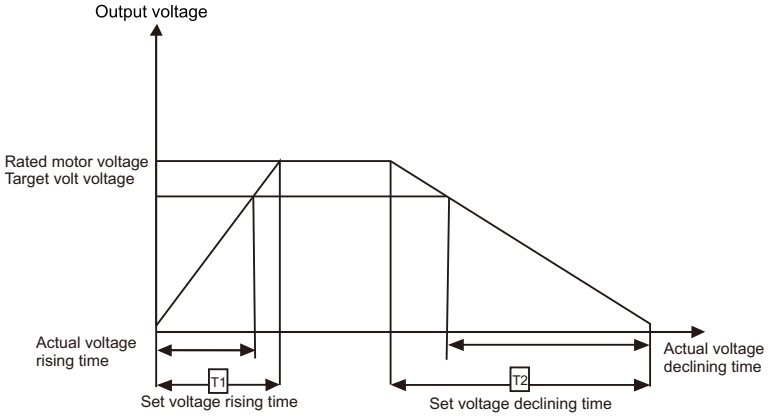

Group H05: Input Terminals

The HS930 provides senven DI terminals (DI5 can be used for high-speed pulse input) and two analog input (AI) terminals. The optional extension card provides another five DI terminals (DI8 to DI10) and an AI terminal (AI3).

Function Code	Parameter Name	Default	Remark
H05.00	DI1 function selection	1: Forward RUN (FWD)	Standard
H05.01	DI2 function selection	2: Reverse RUN	Standard
H05.02	DI3 function selection	7: Fault reset	Standard
H05.03	DI4 function selection	12: Multi-reference terminal 1	Standard
H05.04	DI5 function selection	13: Multi-reference terminal 2	Standard
H05.05	DI6 function selection	0	Extended
H05.06	DI7 function selection	0	Extended
H05.07	DI8 function selection	0	Extended
H05.08	DI9 function selection	0	Extended
H05.09	DI10 function selection	0	Extended

The following table lists the functions available for the DI terminals.

Table 6-1 Functions of DI terminals

Value	Function	Description
0	No function	Set 0 for reserved terminals to avoid malfunction.
1	Forward RUN (FWD)	The terminal is used to control forward or reverse RUN of the AC drive.
2	Reverse RUN (REV)	
3	Three-line control	The terminal determines three-line control of the AC drive. For details, see the description of H05.10
4	Forward JOG(FJOG)	FJOG indicates forward JOG running, while RJOG indicates reverse JOG running. The JOG frequency, acceleration time and deceleration time are described respectively in H08.06,H08.07 and H08.08
5	Reverse JOG(RJOG)	
6	Coast to stop	The AC drive blocks its output, the motor coasts to rest and is not controlled by the AC drive. It is the same as coast to stop described in H01.05
7	Fault reset (RESET)	The terminal is used for fault reset function, the same as the function of RESET key on the operation panel. Remote fault reset is implemented by this function.
8	Normally open (NO) input of external fault	If this terminal becomes ON, the AC drive reports E017 and performs the fault protection action. For more details, see the description of H11.47.

Value	Function	Description
9	Terminal UP	If the frequency is determined by external terminals, the terminals with the two functions are used as increment and decrement commands for frequency modification. When the frequency source is digital setting, they are used to adjust the frequency.
10	Terminal DOWN	
11	UP and DOWN setting clear (terminal,operation panel)	If the frequency source is digital setting, the terminal is used to clear the modification by using the UP/ DOWN function or the increment/decrement key on the operation panel, returning the set frequency to the value of H00.00.
12	Multi-reference terminal1	The setting of 16 speeds or 16 other references can be implemented through combinations of 16 states of these four terminals.
13	Multi-reference terminal2	
14	Multi-reference terminal3	
15	Multi-reference terminal4	
16	PID pause	PID is invalid temporarily. The AC drive maintains the current frequency output without supporting PID adjustment of frequency source.
17	Swing pause	The AC drive outputs the central frequency, and the swing frequency function pauses.
18	RUN pause	The AC drive decelerates to stop, but the running parameters are all memorized, such as PLC, swing frequency and PID parameters. After this function is disabled, the AC drive resumes its status before stop.
19	Acceleration/Deceleration prohibited	It enables the AC drive to maintain the current frequency output without being affected by external signals (except the STOP command).
20	Torque control prohibited	The AC drive is prohibited from torque control and enters the speed control mode.
21	Command source switchover terminal	If the command source is set to terminal control (H00.01 = 1), this terminal is used to perform switchover between terminal control and operation panel control. If the command source is set to communication control (H00.01 = 2), this terminal is used to perform switchover between communication control and operation panel control.
22	Terminal 1 for acceleration/ deceleration time selection	Totally four groups of acceleration/deceleration time can be selected through combinations of two states of these two terminals.
23	Terminal 2 for acceleration/ deceleration time selection	
24	PLC status reset	The terminal is used to restore the original status of PLC control for the AC drive when PLC control is started again after a pause.
25	Counter input	This terminal is used to count pulses.

Value	Function	Description
26	Length count input	This terminal is used to count the length.
27	Counter reset	This terminal is used to clear the counter status.
28	Length reset	This terminal is used to clear the length.
29	Frequency source switchover	The terminal is used to perform switchover between two frequency sources according to the setting in H00.18.
30	Pulse input (enabled only for DI5)	DI5 is used for pulse input.
31	Reserved	Reserved.
32	Immediate DC braking	After this terminal becomes ON, the AC drive directly switches over to the DC braking state.
33	Normally closed (NC) input of external fault	After this terminal becomes ON, the AC drive reports E017 and stops.
34	Frequency modification forbidden	After this terminal becomes ON, the AC drive does not respond to any frequency modification.
35	Reverse PID action direction	After this terminal becomes ON, the PID action direction is reversed to the direction set in H09.03.
36	External STOP terminal 1	In operation panel mode, this terminal can be used to stop the AC drive, equivalent to the function of the STOP key on the operation panel.
37	Command source switchover terminal 2	It is used to perform switchover between terminal control and communication control. If the command source is terminal control, the system will switch over to communication control after this terminal becomes ON.
38	PID integral pause	After this terminal becomes ON, the integral adjustment function pauses. However, the proportional and differentiation adjustment functions are still valid.
39	Switchover between main frequency source X and preset frequency	After this terminal becomes ON, the frequency source X is replaced by the preset frequency set in H00.00.
40	Switchover between auxiliary frequency source Y and preset frequency	After this terminal is enabled, the frequency source Y is replaced by the preset frequency set in H00.00.
41	Motor selection terminal 1	Switchover among the four groups of motor parameters can be implemented through the four state combinations of these two terminals.
42	Motor selection terminal 2	
43	PID parameter switchover	If the PID parameters switchover performed by means of DI terminal (H09.18 = 1), the PID parameters are H09.05 to H09.06 when the terminal becomes OFF; the PID parameters are H09.15 to H09.17 when this terminal becomes ON.
44	User-defined fault 1	If these two terminals become ON, the AC drive reports E027 and E028 respectively, and performs fault protection actions based on the setting in H11.49.
45	User-defined fault 2	

Value	Function	Description
46	Speed control/Torque control switchover	This terminal enables the AC drive to switch over between speed control and torque control. When this terminal becomes OFF, the AC drive runs in the mode set in H17.00. When this terminal becomes ON, the AC drive switches over to the other control mode.
47	Emergency stop	When this terminal becomes ON, the AC drive stops within the shortest time. During the stop process, the current remains at the set current upper limit. This function is used to satisfy the requirement of stopping the AC drive in emergency state.
48	External STOP terminal 2	In any control mode (operation panel, terminal or communication), it can be used to make the AC drive decelerate to stop. In this case, the deceleration time is deceleration time 4.
49	Deceleration DC braking	When this terminal becomes ON, the AC drive decelerates to the initial frequency of stop DC braking and then switches over to DC braking state.
50	Clear the current running time	When this terminal becomes ON, the AC drive's current running time is cleared. This function must be supported by H08.42 and H08.53.

The four multi-reference terminals have 16 state combinations, corresponding to 16 reference values, as listed in the following table.

Table 6-2 State combinations of the four multi-reference terminals

K4	K3	K2	K1	Reference Setting	Corresponding Parameter
OFF	OFF	OFF	OFF	Reference 0	H10.00
OFF	OFF	OFF	ON	Reference 1	H10.01
OFF	OFF	ON	OFF	Reference 2	H10.02
OFF	OFF	ON	ON	Reference 3	H10.03
OFF	ON	OFF	OFF	Reference 4	H10.04
OFF	ON	OFF	ON	Reference 5	H10.05
OFF	ON	ON	OFF	Reference 6	H10.06
OFF	ON	ON	ON	Reference 7	H10.07
ON	OFF	OFF	OFF	Reference 8	H10.08

ON	OFF	OFF	ON	Reference 9	H10.09
ON	OFF	ON	OFF	Reference 10	H10.10
ON	OFF	ON	ON	Reference 11	H10.11
ON	ON	OFF	OFF	Reference 12	H10.12
ON	ON	OFF	ON	Reference 13	H10.13
ON	ON	ON	OFF	Reference 14	H10.14
ON	ON	ON	ON	Reference 15	H10.15

If the frequency source is multi-reference, the value 100% of H10.00 to H10.15 corresponds to the value of H00.05 (Maximum frequency).

Besides the multi-speed function, the multi-reference can be also used as the PID setting source or the voltage source for V/F separation, satisfying the requirement on switchover of different setting values.

Two terminals for acceleration/deceleration time selection have four state combinations, as listed in the following table.

Table 6-3 State combinations of two terminals for acceleration/deceleration time selection

Terminal 2	Terminal 1	Acceleration/Deceleration Time Selection	Corresponding Parameters
OFF	OFF	Acceleration/Deceleration time 1	H00.03, H00.04
OFF	ON	Acceleration/Deceleration time 2	H08.00, H08.01
ON	OFF	Acceleration/Deceleration time 3	H08.02, H08.03
ON	ON	Acceleration/Deceleration time 4	H08.04, H08.05

Two motor selection terminals have four state combinations, corresponding to four motors, as listed in the following table.

Table 6-4 State combinations of two motor selection terminals

Terminal 2	Terminal 1	Selected Motor	Corresponding Parameters
OFF	OFF	Motor 1	Group H02, Group H03
OFF	ON	Motor 2	Group H19
ON	OFF	Motor 3	Group H20
ON	ON	Motor 4	Group H21

Function Code	Parameter Name	Setting Range	Default
H05.11	DI filter time	0.000–1.000s	0.010s

It is used to set the software filter time of DI terminal status. If DI terminals are liable to interference and may cause malfunction, increase the value of this parameter to enhance the anti-interference capability. However, increase of DI filter time will reduce the response of DI terminals.

Function Code	Parameter Name	Setting Range	Default
H05.10	Terminal command mode	0: Two-line mode 1 1: Two-line mode 2 2: Three-line mode 1 3: Three-line mode 2	0

This parameter is used to set the mode in which the AC drive is controlled by external terminals. The following uses DI1, DI2 and DI3 among DI1 to DI10 as an example, with allocating functions of DI1, DI2 and DI3 by setting H05.00 to H05.02.

- 0: Two-line mode 1

  It is the most commonly used two-line mode, in which the forward/reverse rotation of the motor is decided by DI1 and DI2. The parameters are set as below:

Function Code	Parameter Name	Value	Function Description
H05.10	Terminal command mode	0	Two-line 1
H05.00	DI1 function selection	1	Forward RUN (FWD)
H05.01	DI2 function selection	2	Reverse RUN (REV)

Figure 6-7 Setting of two-line mode 1

K1	K2	RUN command
1	0	Forward RUN
0	1	Reverse RUN
1	1	Stop
0	0	Stop

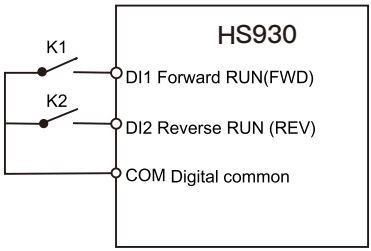

As shown in the preceding figure, when only K1 is ON, the AC drive instructs forward rotation. When only K2 is ON, the AC drive instructs reverse rotation. When K1 and K2 are ON or OFF simultaneously, the AC drive stops.

- 1: Two-line mode 2

  In this mode, DI1 is RUN enabled terminal, and DI2 determines the running direction. The parameters are set as below:

Function Code	Parameter Name	Value	Function Description

H05.10	Terminal command mode	1	Two-line 2
H05.00	DI1 function selection	1	RUN enabled
H05.01	DI2 function selection	2	Forward or reverse direction

Figure 6-8 Setting of two-line mode 2

K1	K2	RUN command
1	0	Forward RUN
1	1	Reverse RUN
0	0	Stop
0	1	Stop

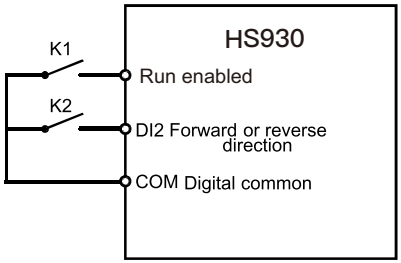

As shown in the preceding figure, if K1 is ON, the AC drive instructs forward rotation when K2 is OFF, and instructs reverse rotation when K2 is ON. If K1 is OFF, the AC drive stops.

- 2: Three-line mode 1

In this mode, DI3 is RUN enabled terminal, and the direction is decided by DI1 and DI2. The parameters are set as below:

Function Code	Parameter Name	Value	Function Description
H05.10	Terminal command mode	2	Three-line 1
H05.00	DI1 function selection	1	Forward RUN (FWD)
H05.01	DI2 function selection	2	Reverse RUN (REV)
H05.02	DI3 function selection	3	Three-line control

Figure 6-9 Setting of three-line mode 1

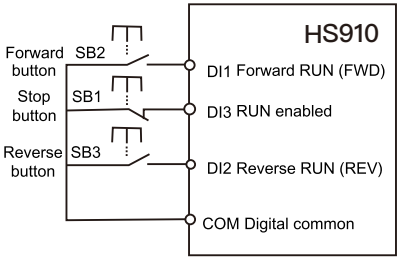

As shown in the preceding figure, if SB1 is ON, the AC drive instructs forward rotation when SB2 is pressed to be ON and instructs reverse rotation when SB3 is pressed to

be ON. The AC drive stops immediately after SB1 becomes OFF. During normal startup and running, SB1 must remain ON. The AC drive's running state is determined by the final actions on SB1, SB2 and SB3.

3: Three-line mode 2

In this mode, DI3 is RUN enabled terminal. The RUN command is given by DI1 and the direction is decided by DI2. The parameters are set as below:

Function Code	Parameter Name	Value	Function Description
H05.10	Terminal command mode	3	Three-line 2
H05.00	DI1 function selection	1	RUN enabled
H05.01	DI2 function selection	2	Forward or reverse direction
H05.02	DI3 function selection	3	Three-line control

Figure 6-10 Setting of three-line mode 2

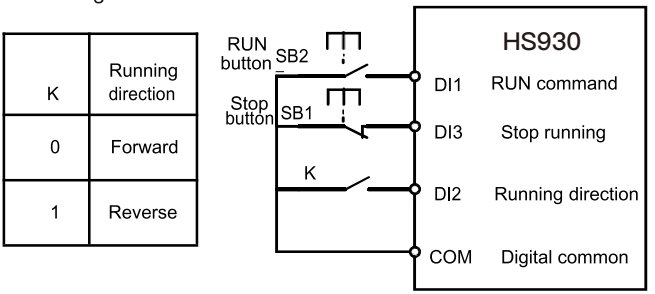

As shown in the preceding figure, if SB1 is ON, the AC drive starts running when SB2 is pressed to be ON; the AC drive instructs forward rotation when K is OFF and instructs reverse rotation when K is ON. The AC drive stops immediately after SB1 becomes OFF. During normal startup and running, SB1 must remain ON. The AC drive's running state is determined by the final actions of SB1, SB2 and K.

Function Code	Parameter Name	Setting Range	Default
H05.32	Terminal UP/DOWN rate	0.01–65.535 Hz/s	1.00 Hz/s

It is used to adjust the rate of change of frequency when the frequency is adjusted by means of terminal UP/DOWN.

If H00.22 (Frequency reference resolution) is 2, the setting range is 0.001–65.535 Hz/s.

If H00.22 (Frequency reference resolution) is 1, the setting range is 0.01–655.35 Hz/s.

Function Code	Parameter Name	Setting Range	Default
H05.12	AI curve 1 minimum input	0.00 V to H05.14	0.00 V
H05.13	Corresponding setting of AI curve 1 minimum input	-100.00%–100.0%	0.0%
H05.14	AI curve 1 maximum input	H05.12 to 10.00 V	10.00 V

H05.15	Corresponding setting of AI curve 1 maximum input	-100.00%–100.0%	100.0%
H05.16	AI1 filter time	0.00–10.00s	0.10s

These parameters are used to define the relationship between the analog input voltage and the corresponding setting. When the analog input voltage exceeds the maximum value (H05.14), the maximum value is used. When the analog input voltage is less than the minimum value (H05.12), the value set in H05.34 (Setting for AI less than minimum input) is used.

When the analog input is current input, 1 mA current corresponds to 0.5 V voltage.

H05.16 (AI1 filter time) is used to set the software filter time of AI1. If the analog input is liable to interference, increase the value of this parameter to stabilize the detected analog input. However, increase of the AI filter time will slow the response of analog detection. Set this parameter properly based on actual conditions.

In different applications, 100% of analog input corresponds to different nominal values. For details, refer to the description of different applications.

Two typical setting examples are shown in the following figure.

Figure 6-11 Corresponding relationship between analog input and set values

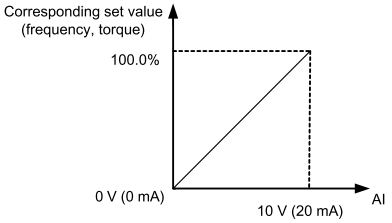

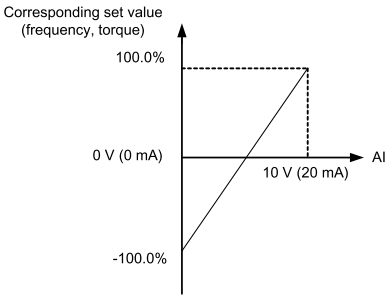

Function Code	Parameter Name	Setting Range	Default
H05.17	AI curve 2 minimum input	0.00 V to H05.19	0.00 V
H05.18	Corresponding setting of AI curve 2 minimum input	-100.00%–100.0%	0.0%

Function Code	Parameter Name	Setting Range	Default
H05.19	AI curve 2 maximum input	H05.17 to 10.00 V	10.00 V
H05.20	Corresponding setting of AI curve 2 maximum input	-100.00%–100.0%	100.0%
H05.21	AI2 filter time	0.00–10.00s	0.10s
H05.22	AI curve 3 minimum input	0.00 V to H05.24	0.00 V
H05.23	Corresponding setting of AI curve 3 minimum input	-100.00%–100.0%	0.0%
H05.24	AI curve 3 maximum input	H05.22 to 10.00 V	10.00 V
H05.25	Corresponding setting of AI curve 3 maximum input	-100.00%–100.0%	100.0%
H05.26	AI3 filter time	0.00–10.00s	0.10s

The method of setting AI2 and AI3 functions is similar to that of setting AI1 function.

Function Code	Parameter Name	Setting Range	Default
H05.27	Pulse minimum input	0.00 kHz to H05.29	0.00 kHz
H05.28	Corresponding setting of pulse minimum input	-100.00%–100.0%	0.0%
H05.29	Pulse maximum input	H05.27 to 50.00 kHz	50.00 kHz
H05.30	Corresponding setting of pulse maximum input	-100.00%–100.0%	100.0%
H05.31	Pulse filter time	0.00–10.00s	0.10s

These parameters are used to set the relationship between DI5 pulse input and corresponding settings. The pulses can only be input by DI5. The method of setting this function is similar to that of setting AI1 function.

Function Code	Parameter Name	Setting Range	Default
H05.33	AI curve selection	Unit's digit (AI1 curve selection)	321
		Curve 1 (2 points, see H05.12 to H05.15) Curve 2 (2 points, see H05.17 to H05.20) Curve 3 (2 points, see H05.22 to H05.25) Curve 4 (4 points, see H23.00 to H23.07) Curve 5 (4 points, see H23.08 to H23.15)	
		Ten's digit (AI2 curve selection)	
		Curve 1 to curve 5 (same as AI1)	

		Hundred's digit (AI3 curve selection)	
		Curve 1 to curve 5 (same as AI1)	

The unit's digit, ten's digit and hundred's digit of this parameter are respectively used to select the corresponding curve of AI1, AI2 and AI3. Any of the five curves can be selected for AI1, AI2 and AI3.

Curve 1, curve 2 and curve 3 are all 2-point curves, set in group H05. Curve 4 and curve 5 are both 4-point curves, set in group H23.

The HS930 provides two AI terminals as standard. AI3 is provided by an optional extension card.

Function Code	Parameter Name	Setting Range	Default
H05.34	Setting for AI less than minimum input	Unit's digit (Setting for AI1 less than minimum input)	000
		0: Minimum value 1: 0.0%	
		Ten's digit (Setting for AI2 less than minimum input)	
		0, 1 (same as AI1)	
		Hundred's digit (Setting for AI3 less than minimum input)	
		0, 1 (same as AI1)	

This parameter is used to determine the corresponding setting when the analog input voltage is less than the minimum value. The unit's digit, ten's digit and hundred's digit of this parameter respectively correspond to the setting for AI2, AI2 and AI3.

If the value of a certain digit is 0, when analog input voltage is less than the minimum input, the corresponding setting of the minimum input (H05.13, H05.18, H05.23) is used.

If the value of a certain digit is 1, when analog input voltage is less than the minimum input, the corresponding value of this analog input is 0.0%.

Function Code	Parameter Name	Setting Range	Default
H05.35	DI1 delay time	0.0–3600.0s	0.0s
H05.36	DI2 delay time	0.0–3600.0s	0.0s
H05.37	DI3 delay time	0.0–3600.0s	0.0s

These parameters are used to set the delay time of the AC drive when the status of DI terminals changes.

Currently, only DI1, DI2 and DI3 support the delay time function.

Function Code	Parameter Name	Setting Range	Default
H05.38	DI valid mode selection 1	Unit's digit (DI1 valid mode)	00000
		0: High level valid 1: Low level valid	
		Ten's digit (DI2 valid mode)	
		0, 1 (same as DI1)	
		Hundred's digit (DI3 valid mode)	
		0, 1 (same as DI1)	
		Thousand's digit (DI4 valid mode)	
		0, 1 (same as DI1)	
		Ten thousand's digit (DI5 valid mode)	
		0, 1 (same as DI1)	
H05.39	DI valid mode selection 2	Unit's digit (DI6 valid mode)	00000
		0, 1 (same as DI1)	
		Ten's digit (DI7 valid mode)	
		0, 1 (same as DI1)	
		Hundred's digit (DI8 state)	
		0, 1 (same as DI1)	
		Thousand's digit (DI9 valid mode)	
		0, 1 (same as DI1)	
		Ten thousand's digit (DI10 valid mode)	
		0, 1 (same as DI1)	

These parameters are used to set the valid mode of DI terminals.

0: High level valid

The DI terminal is valid when being connected with COM, and invalid when being disconnected from COM.

1: Low level valid

The DI terminal is invalid when being connected with COM, and invalid when being disconnected from COM.

Function Code	Parameter Name	Setting Range	Default
H05.40	AI2 input signal selection	0: Voltage signal 1: Current signal	0

AI2 supports voltage/current output, which is determined by jumper. After setting the jumper, perform corresponding setting in H05-40.

Group H06: Output Terminals

The HS930 provides an analog output (AO) terminal, a digital output (DO) terminal, a relay terminal and a FM terminal (used for high-speed pulse output or open-collector switch signal output) as standard. If these output terminals cannot satisfy requirements, use an optional I/O extension card that provides an AO terminal (AO2), a relay terminal (relay 2) and a DO terminal (DO2).

Function Code	Parameter Name	Default
H06.00	FMR function (open-collector output terminal)	0
H06.01	Relay function (T/A-T/B-T/C)	3
H06.02	Extension card relay function (P/A-P/B-P/C)	0
H06.03	DO1 function selection (open-collector output terminal)	1
H06.04	Extension card DO2 function	5

These five parameters are used to select the functions of the five digital output terminals. T/A-T/B-T/C and P/A-P/B-P/C are respectively the relays on the control board and the extension card.

The functions of the output terminals are described in the following table.

Table 6-5 Functions of output terminals

Value	Function	Description
0	No output	The terminal has no function.
1	AC drive running	When the AC drive is running and has output frequency (can be zero), the terminal becomes ON.
2	AC drive overload prewarning	The terminal becomes ON 10s before the AC drive overload protection action is performed.
3	Fault output (stop)	When the AC drive stops due to a fault, the terminal becomes ON.
4	Frequency-level detection FDT1 output	Refer to the descriptions of H08.19 and H08.20.
5	Frequency reached	Refer to the descriptions of H08.21.
6	Zero-speed running (no output at stop)	If the AC drive runs with the output frequency of 0, the terminal becomes ON. If the AC drive is in the stop state, the terminal becomes OFF.

Value	Function	Description
7	Frequency upper limit reached	If the running frequency reaches the upper limit, the terminal becomes ON.
8	Frequency lower limit reached (no output at stop)	If the running frequency reaches the lower limit, the terminal becomes ON. In the stop state, the terminal becomes OFF.
9	Motor overload pre-warning	The AC drive judges whether the motor load exceeds the overload pre-warning threshold before performing the protection action. If the pre-warning threshold is exceeded, the terminal becomes ON. For motor overload parameters, see the descriptions of H11.00 to H11.02.
10	Frequency limited	If the set frequency exceeds the frequency upper limit or lower limit and the output frequency of the AC drive reaches the upper limit or lower limit, the terminal becomes ON.
11	Torque limited	In speed control mode, if the output torque reaches the torque limit, the AC drive enters the stall protection state and meanwhile the terminal becomes ON.
12	PLC cycle complete	When simple PLC completes one cycle, the terminal outputs a pulse signal with width of 250 ms.
13	Set count value reached	The terminal becomes ON when the count value reaches the value set in H13.08.
14	Designated count value reached	The terminal becomes ON when the count value reaches the value set in H13.09.
15	Length reached	The terminal becomes ON when the detected actual length exceeds the value set in H13.05.
16	Accumulative running time reached	If the accumulative running time of the AC drive exceeds the time set in H08.17, the terminal becomes ON.
17	Ready for RUN	If the AC drive main circuit and control circuit become stable, and the AC drive detects no fault and is ready for RUN, the terminal becomes ON.
18	AI1 larger than AI2	When the input of AI1 is larger than the input of AI2, the terminal becomes ON.
19	Undervoltage state output	If the AC drive is in undervoltage state, the terminal becomes ON.
20	Communication setting	Refer to the communication protocol.
21	Reserved	Reserved.
22	Reserved	Reserved.

Value	Function	Description
23	Zero-speed running 2 (having output at stop)	If the output frequency of the AC drive is 0, the terminal becomes ON. In the state of stop, the signal is still ON.
24	Accumulative poweron time reached	If the AC drive accumulative power-on time (H07.13) exceeds the value set in H08.16, the terminal becomes ON.
25	Frequency level detection FDT2 output	Refer to the descriptions of H08.28 and H08.29.
26	Frequency 1 reached	Refer to the descriptions of H08.30 and H08.31.
27	Frequency 2 reached	Refer to the descriptions of H08.32 and H08.33.
28	Current 1 reached	Refer to the descriptions of H08.38 and H08.39.
29	Current 2 reached	Refer to the descriptions of H08.40 and H08.41.
30	Timing reached	If the timing function (H08.42) is valid, the terminal becomes ON after the current running time of the AC drive reaches the set time.
31	AI1 input limit exceeded	If AI1 input is larger than the value of H08.46 (AI1 input voltage upper limit) or lower than the value of H08.45 (AI1 input voltage lower limit), the terminal becomes ON.
32	Load becoming 0	If the load becomes 0, the terminal becomes ON.
33	Reverse running	If the AC drive is in the reverse running state, the terminal becomes ON.
34	Zero current state	Refer to the descriptions of H08.28 and H08.29.
35	Module temperature reached	If the heatsink temperature of the inverter module (H07.08) reaches the set module temperature threshold (H08.47), the terminal becomes ON.
36	Software current limit exceeded	Refer to the descriptions of H08.36 and H08.37.
37	Frequency lower limit reached (having output at stop)	If the running frequency reaches the lower limit, the terminal becomes ON. In the stop state, the signal is still ON.
38	Alarm output	If a fault occurs on the AC drive and the AC drive continues to run, the terminal outputs the alarm signal.
39	Motor overheat warning	If the motor temperature reaches the temperature set in H11.58 (Motor overheat warning threshold), the terminal becomes ON. You can view the motor temperature by using H67.34.
40	Current running time reached	If the current running time of AC drive exceeds the value of H08.53, the terminal becomes ON.

Function Code	Parameter Name	Setting Range	Default
H06.05	FM terminal output mode	0: Pulse output (FMP) 1: Switch signal output (FMR)	0

The FM terminal is programmable multiplexing terminal. It can be used for high-speed pulse output (FMP), with maximum frequency of 50 kHz. Refer to H06.06 for relevant functions of FMP. It can also be used as open collector switch signal output (FMR).

Function Code	Parameter Name	Default
H06.06	FMP function selection	0
H06.07	AO1 function selection	0
H06.08	AO2 function selection	1

The output pulse frequency of the FMP terminal ranges from 0.01 kHz to "Maximum FMP output frequency" (H06.09). The value of H06.09 is between 0.01 kHz and 100.00 kHz.

The output range of AO1 and AO2 is 0–10 V or 0–20 mA. The relationship between pulse and analog output ranges and corresponding functions is listed in the following table.

Table 6-6 Relationship between pulse and analog output ranges and corresponding functions

Value	Function	Range (Corresponding to Pulse or Analog Output Range 0.0%–100.0%)
0	Running frequency	0 to maximum output frequency
1	Set frequency	0 to maximum output frequency
2	Output current	0 to 2 times of rated motor current
3	Output torque (absolute value)	0 to 2 times of rated motor torque
4	Output power	0 to 2 times of rated power
5	Output voltage	0 to 1.2 times of rated AC drive voltage
6	Pulse input	0.01–100.00 kHz
7	AI1	0–10 V
8	AI2	0–10 V (or 0–20 mA)
9	AI3	0–0 V
10	Length	0 to maximum set length
11	Count value	0 to maximum count value
12	Communication setting	0.0%–100.0%
13	tor rotational speed	0 to rotational speed corresponding to maximum output frequency

14	Output current	0.0–1000.0 A
15	Output voltage	0.0–000.0 V
16	Output torque (actual value)	-2 times of rated motor torque to 2 times of rated motor torque

Function Code	Parameter Name	Setting Range	Default
H06.09	Maximum FMP output frequency	0.01–100.00 kHz	50.00 kHz

If the FM terminal is used for pulse output, this parameter is used to set the maximum frequency of pulse output.

Function Code	Parameter Name	Setting Range	Default
H06.10	AO1 offset coefficient	-100.0%–100.0%	0.0%
H06.11	AO1 gain	-10.00–10.00	1.00
H06.12	AO2 offset coefficient	-100.0%–100.0%	0.00%
H06.13	AO2 gain	-10.00–10.00	1.00

These parameters are used to correct the zero drift of analog output and the output amplitude deviation. They can also be used to define the desired AO curve.

If "b" represents zero offset, "k" represents gain, "Y" represents actual output, and "X" represents standard output, the actual output is: Y = kX + b.

The zero offset coefficient 100% of AO1 and AO2 corresponds to 10 V (or 20 mA). The standard output refers to the value corresponding to the analog output of 0 to 10 V (or 0 to 20 mA) with no zero offset or gain adjustment.

For example, if the analog output is used as the running frequency, and it is expected that the output is 8 V when the frequency is 0 and 3 V at the maximum frequency, the gain shall be set to -0.50, and the zero offset shall be set to 80%.

Function Code	Parameter Name	Setting Range	Default
H06.17	FMR output delay time	0.0–3600.0s	0.0s
H06.18	Relay 1 output delay time	0.0–3600.0s	0.0s
H06.19	Relay 2 output delay time	0.0–3600.0s	0.0s
H06.20	DO1 output delay time	0.0–3600.0s	0.0s
H06.21	DO2 output delay time	0.0–3600.0s	0.0s

These parameters are used to set the delay time of output terminals FMR, relay 1, relay 2, DO1 and DO2 from status change to actual output.

Function Code	Parameter Name	Setting Range	Default
H06.22	DO valid mode selection	Unit's digit (FMR valid mode)	00000
		0: Positive logic 1: Negative logic	
		Ten's digit (Relay 1 valid mode)	
		0, 1 (same as FMR)	
		Hundred's digit (Relay 2 valid mode)	
		0, 1 (same as FMR)	
		Thousand's digit (DO1 valid mode)	
		0, 1 (same as FMR)	
		Ten thousand's digit (DO2 valid mode)	
		0, 1 (same as FMR)	

It is used to set the logic of output terminals FMR, relay 1, relay 2, DO1 and DO2.

0: Positive logic

The output terminal is valid when being connected with COM, and invalid when being disconnected from COM.

1: Negative logic

The output terminal is invalid when being connected with COM, and valid when being disconnected from COM.

Group H07: Operation Panel and Display

Function Code	Parameter Name	Setting Range	Default
H07.00	User password	0–65535	0

If it is set to any non-zero number, the password protection function is enabled. After a password has been set and taken effect, you must enter the correct password in order to enter the menu. If the entered password is incorrect you cannot view or modify parameters.

If H07.00 is set to 00000, the previously set user password is cleared, and the password protection function is disabled.

Function Code	Parameter Name	Setting Range	Default
H07.01	Temporary software version	-	-

It is used to display the temporary software version of the control board.

Function Code	Parameter Name	Setting Range	Default
H07.03	F/R/(QUICK/JOG) Key function selection	0: F/R/(QUICK/JOG) key disabled 1: Switchover between operation panel control and remote command control (terminal or communication) 2: Switchover between forward rotation and reverse rotation 3: Forward JOG 4: Reverse JOG	0

F/R/(QUICK/JOG) key refers to multifunctional key. You can set the function of the F/R/(QUICK/JOG) key by using this parameter. You can perform switchover by using this key both in stop or running state.

0: F/R (QUICK/JOG) key disabled

This key is disabled.

1: Switchover between operation panel control and remote command control (terminal or communication)

You can perform switchover from the current command source to the operation panel control (local operation). If the current command source is operation panel control, this key is invalid.

2: Switchover between forward rotation and reverse rotation

You can change the direction of the frequency reference by using the F/R/(QUICK/JOG) key. It is valid only when the current command source is operation panel control.

3: Forward JOG

You can perform forward JOG (FJOG) by using the F/R/(QUICK/JOG) key.

4: Reverse JOG

You can perform reverse JOG (FJOG) by using the F/R/(QUICK/JOG) key.

Function Code	Parameter Name	Setting Range	Default
H07.04	STOP/RESET key function	0: STOP/RESET key enabled only in operation panel control 1: STOP/RESET key enabled in any operation mode	1

Function Code	Parameter Name	Setting Range	Default
H07.05	LED display running parameters 1	0000–FFFF 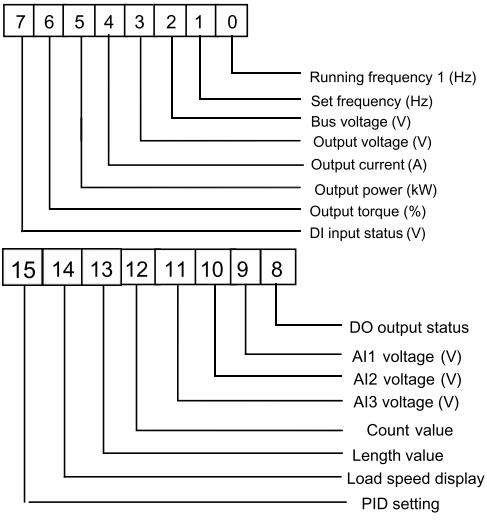 If a parameter needs to be displayed during the running, set the corresponding bit to 1, and set H07.05 to the hexadecimal equivalent of this binary number.	1F

<table>
<tr><th>Function Code</th><th>Parameter Name</th><th>Setting Range</th><th>Default</th></tr>
<tr><td>H07.06</td><td>LED display running parameters 2</td><td>0000-FFFF
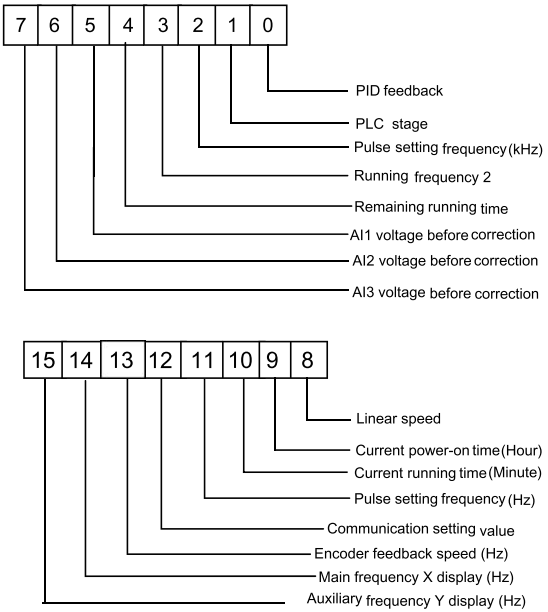

If a parameter needs to be displayed during the running, set the corresponding bit to 1, and set H07.05 to the hexadecimal equivalent of this binary number.</td><td>0</td></tr>
</table>

These two parameters are used to set the parameters that can be viewed when the AC drive is in the running state. You can view a maximum of 32 running state parameters that are displayed from the lowest bit of H07.05.

Function Code	Parameter Name	Setting Range	Default
H07.07	LED display stop parameters	0000-FFFF 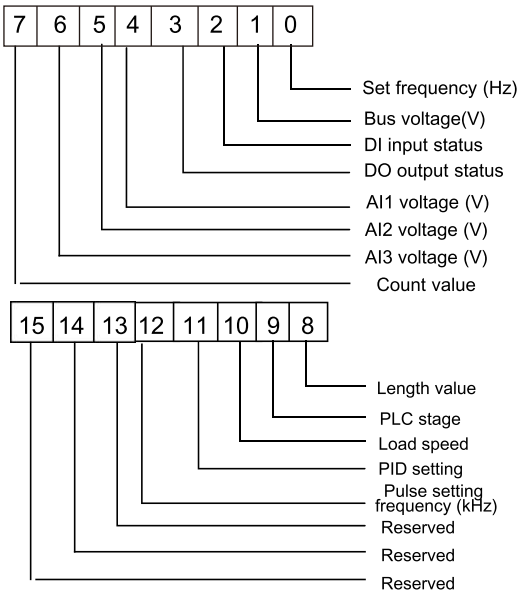 If a parameter needs to be displayed during the running, set the corresponding bit to 1, and set H07.07 to the hexadecimal equivalent of this binary number.	0

Function Code	Parameter Name	Setting Range	Default
H07.10	Load speed display coefficient	0.0001-6.5000	1.0000

This parameter is used to adjust the relationship between the output frequency of the AC drive and the load speed. For details, see the description of H07.12.

Function Code	Parameter Name	Setting Range	Default
H07.08	Heatsink temperature of inverter module	0.0-100.0℃	-

It is used to display the insulated gate bipolar transistor (IGBT) temperature of the inverter module, and the IGBT overheat protection value of the inverter module depends on the model.

Function Code	Parameter Name	Setting Range	Default
H07.11	Accumulative running time	0-65535 h	-

It is used to display the accumulative running time of the AC drive. After the accumulative running time reaches the value set in H08.17, the terminal with the digital output function 12 becomes ON.

Function Code	Parameter Name	Setting Range	Default
H07.09	Product number	AC drive product number	-
H07.02	Software version	Software version of control board	-
H07.12	Number of decimal places for load speed display	0: 0 decimal place 1: 1 decimal place 2: 2 decimal places 3: 3 decimal places	1

H07.12 is used to set the number of decimal places for load speed display. The following gives an example to explain how to calculate the load speed:

Assume that H07.10 (Load speed display coefficient) is 2.000 and H07.12 is 2 (2 decimal places). When the running frequency of the AC drive is 40.00 Hz, the load speed is 40.00 x 2.000 = 80.00 (display of 2 decimal places).

If the AC drive is in the stop state, the load speed is the speed corresponding to the set frequency, namely, "set load speed". If the set frequency is 50.00 Hz, the load speed in the stop state is 50.00 x 2.000 = 100.00 (display of 2 decimal places).

Function Code	Parameter Name	Setting Range	Default
H07.13	Accumulative power-on time	0–65535 h	0 h

It is used to display the accumulative power-on time of the AC drive since the delivery. If the time reaches the set power-on time (H08.17), the terminal with the digital output function 24 becomes ON.

Function Code	Parameter Name	Setting Range	Default
H07.14	Accumulative power consumption	0–65535 kWh	/

It is used to display the accumulative power consumption of the AC drive until now.

Group H08: Auxiliary Functions

Function Code	Parameter Name	Setting Range	Default
H08.00	Acceleration time 2	0.0–6500.0s	Model dependent
H08.01	Deceleration time 2	0.0–6500.0s	Model dependent
H08.02	Acceleration time 3	0.0–6500.0s	Model dependent
H08.03	Deceleration time 3	0.0–6500.0s	Model dependent
H08.04	Acceleration time 4	0.0–500.0s	Model dependent
H08.05	Deceleration time 4	0.0–6500.0s	Model dependent

The HS930 provides a total of four groups of acceleration/deceleration time, that is, the preceding three groups and the group defined by H00.03 and H00.04. Definitions of four groups are completely the same. You can switch over between the four groups of acceleration/deceleration time through different state combinations of DI terminals. For more details, see the descriptions of H05.01 to H05.05.

Function Code	Parameter Name	Setting Range	Default
H08.06	JOG running frequency	0.00 Hz to maximum frequency	2.00 Hz
H08.07	JOG acceleration time	0.0–6500.0s	20.0s
H08.08	JOG deceleration time	0.0–6500.0s	20.0s

These parameters are used to define the set frequency and acceleration/deceleration time of the AC drive when jogging. The startup mode is "Direct start" (H01.00 = 0) and the stop mode is "Decelerate to stop" (H01.05 = 0) during jogging.

Function Code	Parameter Name	Setting Range	Default
H08.09	Jump frequency 1	0.00 Hz to maximum frequency	0.00 Hz
H08.10	Jump frequency 2	0.00 Hz to maximum frequency	0.00 Hz
H08.11	Frequency jump amplitude	0.00 Hz to maximum frequency	0.00 Hz

If the set frequency is within the frequency jump range, the actual running frequency is the jump frequency close to the set frequency. Setting the jump frequency helps to avoid the mechanical resonance point of the load.

The HS930 supports two jump frequencies. If both are set to 0, the frequency jump function is disabled. The principle of the jump frequencies and jump amplitude is shown in the following figure.

Figure 6-15 Principle of the jump frequencies and jump amplitude

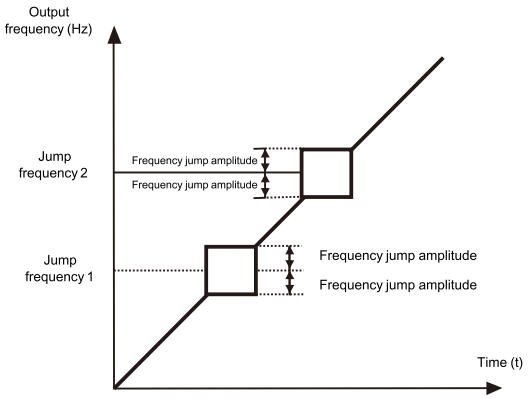
Output
frequency (Hz)
Jump
frequency 2
Frequency jump amplitude
Frequency jump amplitude
Jump
frequency 1
Frequency jump amplitude
Frequency jump amplitude
Time (t)

Function Code	Parameter Name	Setting Range	Default
H08.12	Forward/Reverse rotation dead-zone time	0.0–3000.0s	0.0s

It is used to set the time when the output is 0 Hz at transition of the AC drive forward rotation and reverse rotation, as shown in the following figure.

Figure 6-16 Forward/Reverse rotation dead-zone time

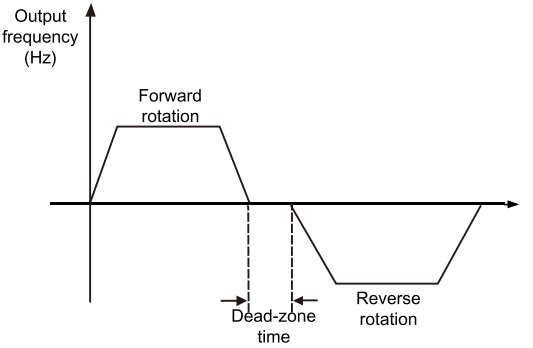

Function Code	Parameter Name	Setting Range	Default
H08.13	Reverse control	0: Enabled 1: Disabled	0

It is used to set whether the AC drive allows reverse rotation. In the applications where reverse rotation is prohibited, set this parameter to 1.

Function Code	Parameter Name	Setting Range	Default
H08.14	Running mode when set frequency lower than frequency lower limit	0: Run at frequency lower limit 1: Stop 2: Run at zero speed	0

It is used to set the AC drive running mode when the set frequency is lower than the frequency lower limit. The HS930 provides three running modes to satisfy requirements of various applications.

Function Code	Parameter Name	Setting Range	Default
H08.15	Droop control	0.00–10.00 Hz	0.00 Hz

This function is used for balancing the workload allocation when multiple motors are used to drive the same load. The output frequency of the AC drives decreases as the load increases. You can reduce the workload of the motor under load by decreasing the output frequency for this motor, implementing workload balancing between multiple motors.

Function Code	Parameter Name	Setting Range	Default
H08.16	Accumulative power-on time threshold	0–65000 h	0 h

If the accumulative power-on time (H07.13) reaches the value set in this parameter, the corresponding DO terminal becomes ON.

For example, combining virtual DI/DO functions, to implement the function that the AC drive reports an alarm when the actual accumulative power-on time reaches the threshold of 100 hours, perform the setting as follows:

1) Set virtual DI1 to user-defined fault 1: H18.00 = 44.

2) Set that the valid state of virtual DI1 is from virtual DO1: H18.05 = 0000.

3) Set virtual DO1 to power-on time reached: H18.11=24.

4) Set the accumulative power-on time threshold to 100 h: H08.16 = 100 h.

Then, the AC drive reports E029 when the accumulative power-on time reaches 100 hours.

Function Code	Parameter Name	Setting Range	Default
H08.17	Accumulative running time threshold	0–65000 h	0 h

It is used to set the accumulative running time threshold of the AC drive. If the accumulative running time (H07.11) reaches the value set in this parameter, the corresponding DO terminal becomes ON.

Function Code	Parameter Name	Setting Range	Default
H08.18	Startup protection	0: No 1: Yes	0

This parameter is used to set whether to enable the safety protection. If it is set to 1, the AC drive does not respond to the run command valid upon AC drive power-on (for example, an input terminal is ON before power-on). The AC drive responds only after the run command is cancelled and becomes valid again.

In addition, the AC drive does not respond to the run command valid upon fault reset of the AC drive. The run protection can be disabled only after the run command is cancelled.

In this way, the motor can be protected from responding to run commands upon power-on or fault reset in unexpected conditions.

Function Code	Parameter Name	Setting Range	Default
H08.19	Frequency detection value (FDT1)	0.00 Hz to maximum frequency	50.00 Hz
H08.20	Frequency detection hysteresis (FDT hysteresis 1)	0.0%–100.0% (FDT1 level)	5.0%

If the running frequency is higher than the value of H08.19, the corresponding DO terminal becomes ON. If the running frequency is lower than value of H08.19, the DO terminal goes OFF

These two parameters are respectively used to set the detection value of output frequency and hysteresis value upon cancellation of the output. The value of H08.20 is a percentage of the hysteresis frequency to the frequency detection value (H08.19).

The FDT function is shown in the following figure.

Figure 6-17 FDT level

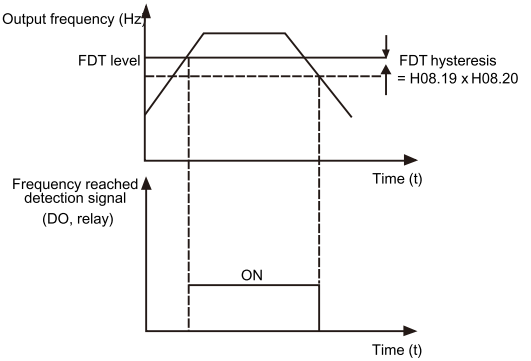

Function Code	Parameter Name	Setting Range	Default
H08.21	Detection range of frequency reached	0.00–100% (maximum frequency)	0.0%

If the AC drive running frequency is within the certain range of the set frequency, the corresponding DO terminal becomes ON.

This parameter is used to set the range within which the output frequency is detected to reach the set frequency. The value of this parameter is a percentage relative to the maximum frequency. The detection range of frequency reached is shown in the following figure.

Figure 6-18 Detection range of frequency reached

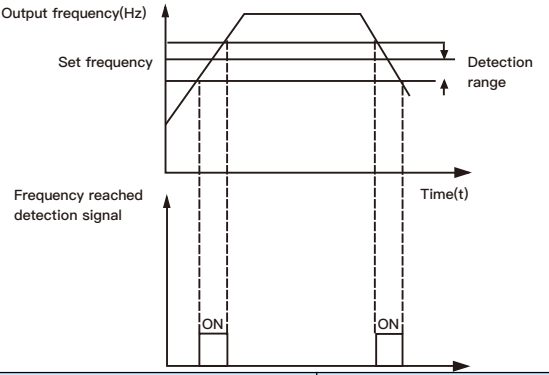

Function Code	Parameter Name	Setting Range	Default
H08.22	Jump frequency during acceleration/deceleration	0: Disabled 1: Enabled	0

It is used to set whether the jump frequencies are valid during acceleration/deceleration.

When the jump frequencies are valid during acceleration/deceleration, and the running frequency is within the frequency jump range, the actual running frequency will jump over the set frequency jump amplitude (rise directly from the lowest jump frequency to the highest jump frequency). The following figure shows the diagram when the jump frequencies are valid during acceleration/deceleration.

Figure 6-19 Diagram when the jump frequencies are valid during acceleration/deceleration

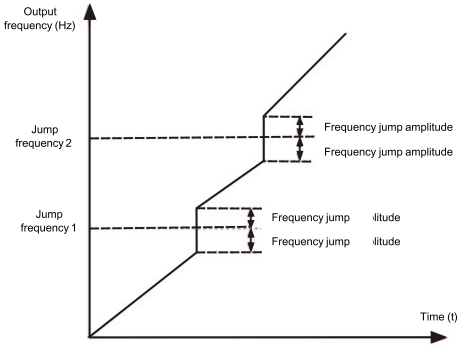

Function Code	Parameter Name	Setting Range	Default
H08-25	Frequency switchover point between acceleration time 1 and acceleration time 2	0.00 Hz to maximum frequency	0.00 Hz
H08-26	Frequency switchover point between deceleration time 1 and deceleration time 2	0.00 to maximum frequency	0.00 Hz

This function is valid when motor 1 is selected and acceleration/deceleration time switchover is not performed by means of DI terminal. It is used to select different groups of acceleration/ deceleration time based on the running frequency range rather than DI terminal during the running process of the AC drive.

Figure 6-20 Acceleration/deceleration time switchover

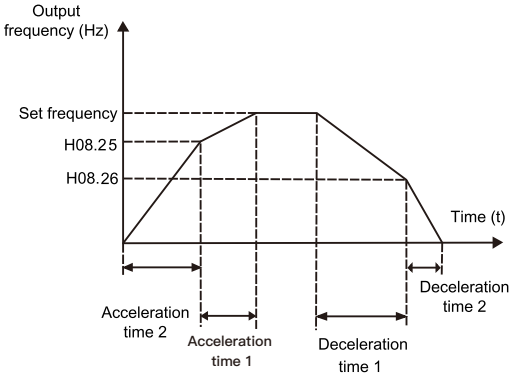

During acceleration, if the running frequency is smaller than the value of H08.25, acceleration time 2 is selected. If the running frequency is larger than the value of H08.25, acceleration time 1 is selected.

During deceleration, if the running frequency is larger than the value of H08.26, deceleration time 1 is selected. If the running frequency is smaller than the value of H08.26, deceleration time 2 is selected.

Function Code	Parameter Name	Setting Range	Default
H08.27	Terminal JOG preferred	0: Disabled 1: Enabled	0

It is used to set whether terminal JOG is preferred.

If terminal JOG is preferred, the AC drive switches to terminal JOG running state when there is a terminal JOG command during the running process of the AC drive.

Function Code	Parameter Name	Setting Range	Default
H08.28	Frequency detection value (FDT2)	0.00 to maximum frequency	50.00 Hz
H08.29	Frequency detection hysteresis (FDT hysteresis 2)	0.0%–100.0% (FDT2 level)	5.0%

The frequency detection function is the same as FDT1 function. For details, refer to the descriptions of H08.19 and H08.20.

Function Code	Parameter Name	Setting Range	Default
H08.30	Any frequency reaching detection value 1	0.00 Hz to maximum frequency	50.00 Hz
H08.31	Any frequency reaching detection amplitude 1	0.0%–100.0% (maximum frequency)	0.0%
H08.32	Any frequency reaching detection value 2	0.00 Hz to maximum frequency	50.00 Hz
H08.33	Any frequency reaching detection amplitude 2	0.0%–100.0% (maximum frequency)	0.0%

If the output frequency of the AC drive is within the positive and negative amplitudes of the any frequency reaching detection value, the corresponding DO becomes ON.

The HS930 provides two groups of any frequency reaching detection parameters, including frequency detection value and detection amplitude, as shown in the following figure.

Figure 6-21 Any frequency reaching detection

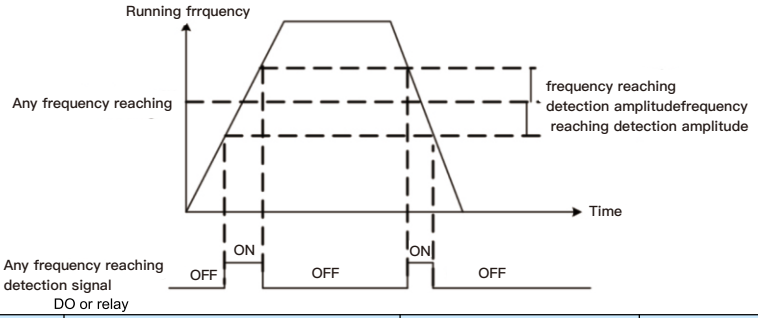

Function Code	Parameter Name	Setting Range	Default
H08.34	Zero current detection level	0.0%–300.0% (rated motor current)	5.0%
H08.35	Zero current detection delay time	0.00–600.00s	0.10s

If the output current of the AC drive is equal to or less than the zero current detection level and the duration exceeds the zero current detection delay time, the corresponding DO becomes ON. The zero current detection is shown in the following figure.

Figure 6-22 Zero current detection

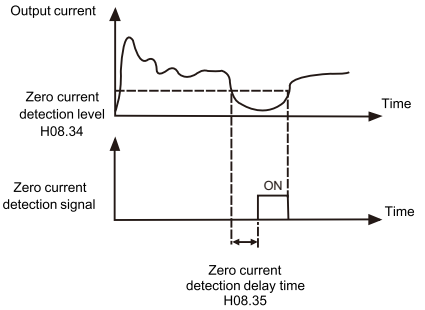

Function Code	Parameter Name	Setting Range	Default
H08.36	Output overcurrent threshold	0.0% (no detection) 0.1%–300.0% (rated motor current)	200.0%
H08.37	Output overcurrent detection delay time	0.00–600.00s	0.00s

If the output current of the AC drive is equal to or higher than the overcurrent threshold and the duration exceeds the detection delay time, the corresponding DO becomes ON. The output overcurrent detection function is shown in the following figure.

Figure 6-23 Output overcurrent detection

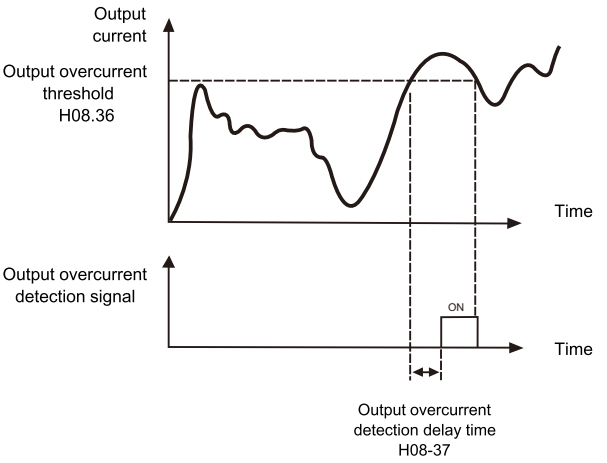

Function Code	Parameter Name	Setting Range	Default
H08.38	Any current reaching 1	0.0%–300.0% (rated motor current)	100.0%
H08.39	Any current reaching 1 amplitude	0.0%–300.0% (rated motor current)	0.0%
H08.40	Any current reaching 2	0.0%–300.0% (rated motor current)	100.0%
H08.41	Any current reaching 2 amplitude	0.0%–300.0% (rated motor current)	0.0%

If the output current of the AC drive is within the positive and negative amplitudes of any current reaching detection value, the corresponding DO becomes ON.

The HS930 provides two groups of any current reaching detection parameters, including current detection value and detection amplitudes, as shown in the following figure.

Figure 6-24 Any current reaching detection

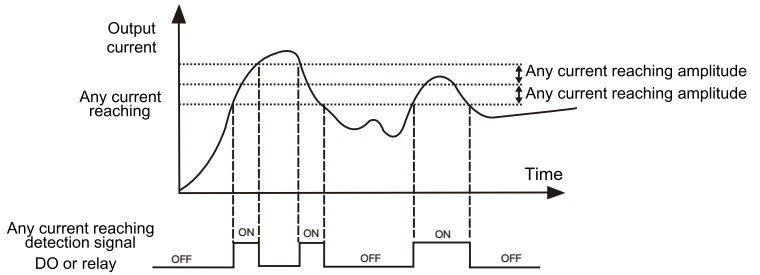

Function Code	Parameter Name	Setting Range	Default
H08.42	Timing function	0: Disabled 1: Enabled	0
H08.43	Timing duration source	0: H08.44 1: AI1 2: AI2 3: AI3 (100% of analog input corresponds to the value of H08.44)	0
H08.44	Timing duration	0.0–6500.0 min	0.0 min

These parameters are used to implement the AC drive timing function.

If H08.42 is set to 1, the AC drive starts to time at startup. When the set timing duration is reached, the AC drive stops automatically and meanwhile the corresponding DO becomes ON.

The AC drive starts timing from 0 each time it starts up and the remaining timing duration can be queried by H67.20.

The timing duration is set in H08.43 and H08.44, in unit of minute.

Function Code	Parameter Name	Setting Range	Default
H08.45	AI1 input voltage lower limit	0.00 V to H08.46	3.10 V
H08.46	AI1 input voltage upper limit	H08.45 to 10.00 V	6.80 V

These two parameters are used to set the limits of the input voltage to provide protection on the AC drive. When the AI1 input is larger than the value of H08.46 or smaller than the value of H08.45, the corresponding DO becomes ON, indicating that AI1 input exceeds the limit.

Function Code	Parameter Name	Setting Range	Default
H08.47	Module temperature threshold	0–75 ℃	75 ℃

When the heatsink temperature of the AC drive reaches the value of this parameter, the corresponding DO becomes ON, indicating that the module temperature reaches the threshold.

Function Code	Parameter Name	Setting Range	Default
H08.48	Cooling fan control	0: Fan working during running 1: Fan working continuously	0

It is used to set the working mode of the cooling fan. If this parameter is set to 0, the fan works when the AC drive is in running state. When the AC drive stops, the cooling fan works if the heatsink temperature is higher than 40 ℃, and stops working if the heatsink temperature is lower than 40 ℃.

If this parameter is set to 1, the cooling fan keeps working after power-on.

Function Code	Parameter Name	Setting Range	Default
H08.49	Wakeup frequency	Dormant frequency (H08.51) to maximum frequency (H00.05)	0.00 Hz
H08.50	Wakeup delay time	0.0–6500.0s	0.0s
H08.51	Dormant frequency	0.00 Hz to wakeup frequency (H08.49)	0.00 Hz
H08.52	Dormant delay time	0.0–6500.0s	0.0s

These parameters are used to implement the dormant and wakeup functions in the water supply application.

When the AC drive is in running state, the AC drive enters the dormant state and stops automatically after the dormant delay time (H08.52) if the set frequency is lower than or equal to the dormant frequency (H08.51).

When the AC drive is in dormant state and the current running command is effective, the AC drives starts up after the wakeup delay time (H08.50) if the set frequency is higher than or equal to the wakeup frequency (H08.49).

Generally, set the wakeup frequency equal to or higher than the dormant frequency. If the wakeup frequency and dormant frequency are set to 0, the dormant and wakeup functions are disabled.

When the dormant function is enabled, if the frequency source is PID, whether PID operation is performed in the dormant state is determined by H09.28. In this case, select PID operation enabled in the stop state (H09.28 = 1).

Function Code	Parameter Name	Setting Range	Default
H08.53	Current running time reached	0.0–6500.0 min	0.0 min

If the current running time reaches the value set in this parameter, the corresponding DO becomes ON, indicating that the current running time is reached.

Group H09: Process Control PID Function

PID control is a general process control method. By performing proportional, integral anddifferential operations on the difference between the feedback signal and the target signal, it adjusts the output frequency and constitutes a feedback system to stabilize the controlled counter around the target value.

It is applied to process control such as flow control, pressure control and temperature control. The following figure shows the principle block diagram of PID control.

Figure 6-27 Principle block diagram of PID control

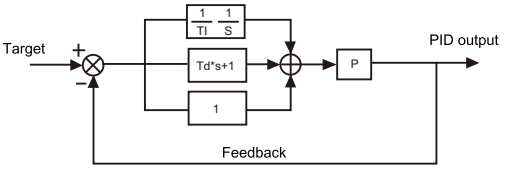

Function Code	Parameter Name	Setting Range	Default
H09.00	PID setting source	0: H09.01 1: AI1 2: AI2 3: AI3 4: Pulse setting (DI5) 5: Communication setting 6: Multi-reference	0
H09.01	PID digital setting	0.0%–100.0%	50.0%

H09.00 is used to select the channel of target process PID setting. The PID setting is a relative value and ranges from 0.0% to 100.0%. The PID feedback is also a relative value. The purpose of PID control is to make the PID setting and PID feedback equal.

Function Code	Parameter Name	Setting Range	Default
H09.02	PID feedback source	0: AI1 1: AI2 2: AI3 3: AI1 – AI2 4: Pulse setting (DI5) 5: Communication setting 6: AI1 + AI2 7: MAX (|AI1|, |AI2|) 8: MIN (|AI1|, |AI2|)	0

This parameter is used to select the feedback signal channel of process PID.

The PID feedback is a relative value and ranges from 0.0% to 100.0%.

Function Code	Parameter Name	Setting Range	Default
H09.03	PID action direction	0: Forward action 1: Reverse action	0

0: Forward action

When the feedback value is smaller than the PID setting, the AC drive's output frequency rises. For example, the winding tension control requires forward PID action.

1: Reverse action

When the feedback value is smaller than the PID setting, the AC drive's output frequency reduces. For example, the unwinding tension control requires reverse PID action.

Note that this function is influenced by the DI function 35 "Reverse PID action direction".

Function Code	Parameter Name	Setting Range	Default
H09.04	Proportional gain Kp1	0.0–100.0	20.0
H09.05	Integral time Ti1	0.01–10.00s	2.00s
H09.06	Differential time Td1	0.00–10.000	0.000s

H09.04 (Proportional gain Kp1)

It decides the regulating intensity of the PID regulator. The higher the Kp1 is, the larger the regulating intensity is. The value 100.0 indicates when the deviation between PID feedback and PID setting is 100.0%, the adjustment amplitude of the PID regulator on the output frequency reference is the maximum frequency.

H09.05 (Integral time Ti1)

It decides the integral regulating intensity. The shorter the integral time is, the larger the regulating intensity is. When the deviation between PID feedback and PID setting is 100.0%, the integral regulator performs continuous adjustment for the time set in H09.06 Then the adjustment amplitude reaches the maximum frequency.

H09.06 (Differential time Td1)

It decides the regulating intensity of the PID regulator on the deviation change. The longer the differential time is, the larger the regulating intensity is. Differential time is the time within which the feedback value change reaches 100.0%, and then the adjustment amplitude reaches the maximum frequency.

Function Code	Parameter Name	Setting Range	Default
H09.07	PID setting feedback range	0–65535	1000

This parameter is a non-dimensional unit. It is used for PID setting display (H67.15) and PID feedback display (H67.16).

Relative value 100% of PID setting feedback corresponds to the value of H09.07. If H09.07 is set to 2000 and PID setting is 100.0%, the PID setting display (H67.15) is 2000.

Function Code	Parameter Name	Setting Range	Default
H09.08	Cut-off frequency of PID reverse rotation	0.00 to maximum frequency	2.00 Hz

In some situations, only when the PID output frequency is a negative value (AC drive reverse rotation), PID setting and PID feedback can be equal. However, too high reverse rotation frequency is prohibited in some applications, and H09.08 is used to determine the reverse rotation frequency upper limit.

Function Code	Parameter Name	Setting Range	Default
H09.09	PID deviation limit	0.0%–100.0%	0.0%

If the deviation between PID feedback and PID setting is smaller than the value of H09.09, PID control stops. The small deviation between PID feedback and PID setting will make the output frequency stabilize, effective for some closed-loop control applications.

Function Code	Parameter Name	Setting Range	Default
H09.10	PID differential limit	0.00%–100.00%	0.10%

It is used to set the PID differential output range. In PID control, the differential operation may easily cause system oscillation. Thus, the PID differential regulation is restricted to a small range.

Function Code	Parameter Name	Setting Range	Default
H09.11	PID setting change time	0.00–650.00s	0.00s

The PID setting change time indicates the time required for PID setting changing from 0.0% to 100.0%. The PID setting changes linearly according to the change time, reducing the impact caused by sudden setting change on the system.

Function Code	Parameter Name	Setting Range	Default
H09.12	PID feedback filter time	0.00–60.00s	0.00s
H09.13	PID output filter time	0.00–60.00s	0.00s

H09.12 is used to filter the PID feedback, helping to reduce interference on the feedback but slowing the response of the process closed-loop system.

H09.13 is used to filter the PID output frequency, helping to weaken sudden change of the AC drive output frequency but slowing the response of the process closed-loop system.

Function Code	Parameter Name	Setting Range	Default
H09.15	Proportional gain Kp2	0.0–100.0	20.0
H09.16	Integral time Ti2	0.01–10.00s	2.00s
H09.17	Differential time Td2	0.000–10.000s	0.000s
H09.18	PID parameter switchover condition	0: No switchover 1: Switchover via DI 2: Automatic switchover based on deviation	0
H09.19	PID parameter switchover deviation 1	0.0% to H09.20	20.0%
H09.20	PID parameter switchover deviation 2	H09.19 to 100.0%	80.0%

In some applications, PID parameters switchover is required when one group of PID parameters cannot satisfy the requirement of the whole running process.

These parameters are used for switchover between two groups of PID parameters. Regulator parameters H09.15 to H09.17 are set in the same way as H09.04 to H09.06.

The switchover can be implemented either via a DI terminal or automatically implemented based on the deviation.

If you select switchover via a DI terminal, the DI must be allocated with function 43 "PID parameter switchover". If the DI is OFF, group 1 (H09.04 to H09.06) is selected. If the DI is ON, group 2 (H09.15 to H09.17) is selected.

If you select automatic switchover, when the absolute value of the deviation between PID feedback and PID setting is smaller than the value of H09.19, group 1 is selected. When the absolute value of the deviation between PID feedback and PID setting is higher than the value of H09.20, group 2 is selected. When the deviation is between H09.19 and H09.20, the PID parameters are the linear interpolated value of the two groups of parameter values.

Figure 6-28 PID parameters switchover

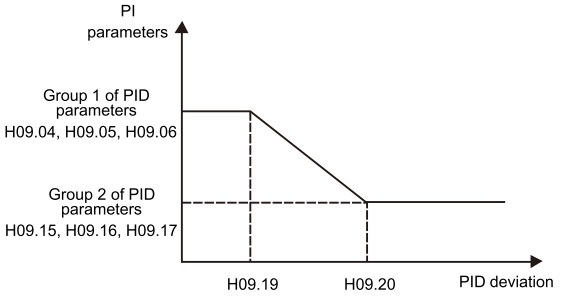

Function Code	Parameter Name	Setting Range	Default
H09.21	PID initial value	0.0%–100.0%	0.0%
H09.22	PID initial value holding time	0.00–650.00s	0.00s

When the AC drive starts up, the PID starts closed-loop algorithm only after the PID output is fixed to the PID initial value (H09.21) and lasts the time set in H09.22.

Figure 6-29 PID initial value function

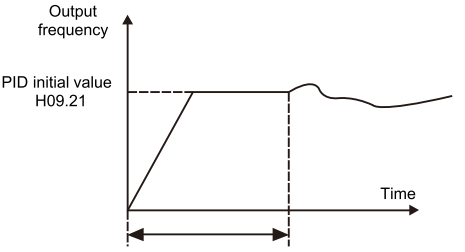

Function Code	Parameter Name	Setting Range	Default
H09.23	Maximum deviation between two PID outputs in forward direction	0.00%–100.00%	1.00%
H09.24	Maximum deviation between two PID outputs in reverse direction	0.00%–100.00%	1.00%

This function is used to limit the deviation between two PID outputs (2 ms per PID output) to suppress the rapid change of PID output and stabilize the running of the AC drive.

H09.23 and H09.24 respectively correspond to the maximum absolute value of the output deviation in forward direction and in reverse direction.

Function Code	Parameter Name	Setting Range	Default
H09.25	PID integral property	Unit's digit (Integral separated)	00
		0: Invalid 1: Valid	
		Ten's digit (Whether to stop integral operation when the output reaches the limit)	
		0: Continue integral operation 1: Stop integral operation	

Integral separated

If it is set to valid, the PID integral operation stops when the DI allocated with function 38 "PID integral pause" is ON In this case, only proportional and differential operations take effect.

If it is set to invalid, integral separated remains invalid no matter whether the DI allocated with function 38 "PID integral pause" is ON or not.

Whether to stop integral operation when the output reaches the limit

If "Stop integral operation" is selected, the PID integral operation stops, which may help to reduce the PID overshoot.

Function Code	Parameter Name	Setting Range	Default
H09.26	Detection value of PID feedback loss	0.0%: Not judging feedback loss 0.1%–100.0%	0.0%
H09.27	Detection time of PID feedback loss	0.0–20.0s	0.0s

These parameters are used to judge whether PID feedback is lost.

If the PID feedback is smaller than the value of H09.26 and the lasting time exceeds the value of H09.27, the AC drive reports E031 and acts according to the selected fault protection action.

Function Code	Parameter Name	Setting Range	Default
H09.28	PID operation at stop	0: No PID operation at stop 1: PID operation at stop	0

It is used to select whether to continue PID operation in the state of stop. Generally, the PID operation stops when the AC drive stops.

Group H10: Multi-Reference and Simple PLC Function

The HS930 multi-reference has many functions. Besides multi-speed, it can be used as the setting source of the V/F separated voltage source and setting source of process PID. In addition, the multi-reference is relative value.

The simple PLC function is different from the HS930 user programmable function. Simple PLC can only complete simple combination of multi-reference, while the user programmable function is more practical. For details, see the descriptions of group H24.

Function Code	Parameter Name	Setting Range	Default
H10.00	Reference 0	-100.0%–100.0%	0.0%
H10.01	Reference 1	-100.0%–100.0%	0.0%
H10.02	Reference 2	-100.0%–100.0%	0.0%
H10.03	Reference 3	-100.0%–100.0%	0.0%
H10.04	Reference 4	-100.0%–100.0%	0.0%
H10.05	Reference 5	-100.0%–100.0%	0.0%
H10.06	Reference 6	-100.0%–100.0%	0.0%
H10.07	Reference 7	-100.0%–100.0%	0.0%
H10.08	Reference 8	-100.0%–100.0%	0.0%
H10.09	Reference 9	-100.0%–100.0%	0.0%
H10.10	Reference 10	-100.0%–100.0%	0.0%
H10.11	Reference 11	-100.0%–100.0%	0.0%
H10.12	Reference 12	-100.0%–100.0%	0.0%
H10.13	Reference 13	-100.0%–100.0%	0.0%
H10.14	Reference 14	-100.0%–100.0%	0.0%
H10.15	Reference 15	-100.0%–100.0%	0.0%

Multi-reference can be the setting source of frequency, V/F separated voltage and process PID. The multi-reference is relative value and ranges from -100.0% to 100.0%.

As frequency source, it is a percentage relative to the maximum frequency. As V/F separated voltage source, it is a percentage relative to the rated motor voltage. As process PID setting source, it does not require conversion.

Multi-reference can be switched over based on different states of DI terminals. For details, see the descriptions of group H05.

Function Code	Parameter Name	Setting Range	Default
H10.16	Simple PLC running mode	0: Stop after the AC drive runs one cycle 1: Keep final values after the AC drive runs one cycle 2: Repeat after the AC drive runs one cycle	0

0: Stop after the AC drive runs one cycle

The AC drive stops after running one cycle, and will not start up until receiving another command.

1: Keep final values after the AC drive runs one cycle

The AC drive keeps the final running frequency and direction after running one cycle.

2: Repeat after the AC drive runs one cycle

The AC drive automatically starts another cycle after running one cycle, and will not stop until receiving the stop command.

Simple PLC can be either the frequency source or V/F separated voltage source.

When simple PLC is used as the frequency source, whether parameter values of H10.00 to H10.15 are positive or negative determines the running direction. If the parameter values arenegative, it indicates that the AC drive runs in reverse direction.

Figure 6-32 Simple PLC when used as frequency source

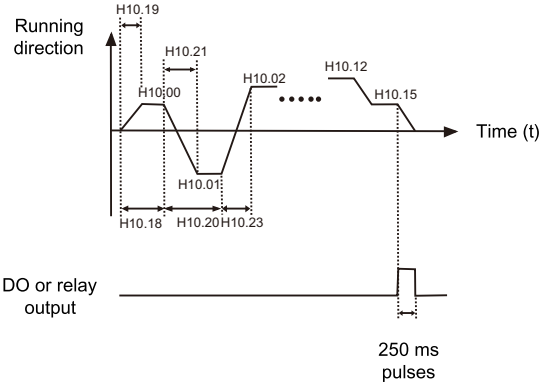

Function Code	Parameter Name	Setting Range	Default
H10.17	Simple PLC retentive selection	Unit's digit (Retentive upon power failure) 0: No 1: Yes Ten's digit (Retentive upon stop) 0: No 1: Yes	00

PLC retentive upon power failure indicates that the AC drive memorizes the PLC running moment and running frequency before power failure and will continue to run from the memorized moment after it is powered on again. If the unit's digit is set to 0, the AC drive restarts the PLC process after it is powered on again.

PLC retentive upon stop indicates that the AC drive records the PLC running moment and running frequency upon stop and will continue to run from the recorded moment after it starts up again. If the ten's digit is set to 0, the AC drive restarts the PLC process after it starts up again.

Function Code	Parameter Name	Setting Range	Default
H10.18	Running time of simple PLC reference 0	0.0–6553.5s (h)	0.0s (h)
H10.19	Acceleration/deceleration time of simple PLC reference 0	0–3	0
H10.20	Running time of simple PLC reference 1	0.0–6553.5s (h)	0.0s (h)
H10.21	Acceleration/deceleration time of simple PLC reference 1	0–3	0

Function Code	Parameter Name	Setting Range	Default
H10.22	Running time of simple PLC reference 2	0.0–6553.5s (h)	0.0s (h)
H10.23	Acceleration/deceleration time of simple PLC reference 2	0–3	0
H10.24	Running time of simple PLC reference 3	0.0–6553.5s (h)	0.0s (h)
H10.25	Acceleration/deceleration time of simple PLC reference 3	0–3	0
H10.26	Running time of simple PLC reference 4	0.0–6553.5s (h)	0.0s (h)
H10.27	Acceleration/deceleration time of simple PLC reference 4	0–3	0
H10.28	Running time of simple PLC reference 5	0.0–6553.5s (h)	0.0s (h)
H10.29	Acceleration/deceleration time of simple PLC reference 5	0–3	0
H10.30	Running time of simple PLC reference 6	0.0–6553.5s (h)	0.0s (h)
H10.31	Acceleration/deceleration time of simple PLC reference 6	0–3	0
H10.32	Running time of simple PLC reference 7	0.0–6553.5s (h)	0.0s (h)
H10.33	Acceleration/deceleration time of simple PLC reference 7	0–3	0
H10.34	Running time of simple PLC reference 8	0.0–6553.5s (h)	0.0s (h)
H10.35	Acceleration/deceleration time of simple PLC reference 8	0–3	0
H10.36	Running time of simple PLC reference 9	0.0–6553.5s (h)	0.0s (h)
H10.37	Acceleration/deceleration time of simple PLC reference 9	0–3	0
H10.38	Running time of simple PLC reference 10	0.0–6553.5s (h)	0.0s (h)
H10.39	Acceleration/deceleration time of simple PLC reference 10	0–3	0
H10.40	Running time of simple PLC reference 11	0.0–6553.5s (h)	0.0s (h)
H10.41	Acceleration/deceleration time of simple PLC reference 11	0–3	0
H10.42	Running time of simple PLC reference 12	0.0–6553.5s (h)	0.0s (h)

H10.43	Acceleration/deceleration time of simple PLC reference 12	0–3	0
H10.44	Running time of simple PLC reference 13	0.0–6553.5s (h)	0.0s (h)
H10.45	Acceleration/deceleration time of simple PLC reference 13	0–3	0
H10.46	Running time of simple PLC reference 14	0.0–6553.5s (h)	0.0s (h)
H10.47	Acceleration/deceleration time of simple PLC reference 14	0–3	0
H10.48	Running time of simple PLC reference 15	0.0–6553.5s (h)	0.0s (h)
H10.49	Acceleration/deceleration time of simple PLC reference 15	0–3	0
H10.50	Time unit of simple PLC running	0: s (second) 1: h (hour)	0
H10.51	Reference 0 source	0: Set by H10.00 1: AI1 2: AI2 3: AI3 4: Pulse setting 5: PID 6: Set by preset frequency (H00.00), modified via terminal UP/DOWN	0

It determines the setting channel of reference 0. You can perform convenient switchover between the setting channels. When multi-reference or simple PLC is used as frequency source, the switchover between two frequency sources can be realized easily.

Group H11: Fault and Protection

Function Code	Parameter Name	Setting Range	Default
H11.00	Motor overload protection selection	0: Disabled 1: Enabled	1
H11.01	Motor overload protection gain	0.20–10.00	1.00

H11.00 = 0

The motor overload protective function is disabled. The motor is exposed to potential damage due to overheating. A thermal relay is suggested to be installed between the AC drive and the motor.

H11.00 = 1

The AC drive judges whether the motor is overloaded according to the inverse time-lag curve of the motor overload protection.

The inverse time-lag curve of the motor overload protection is:

220% x H11.01 x rated motor current (if the load remains at this value for one minute, the AC drive reports motor overload fault), or

150% x H11.01 x rated motor current (if the load remains at this value for 60 minutes, the AC drive reports motor overload fault)

Set H11.01 properly based on the actual overload capacity. If the value of H11.01 is set too large, damage to the motor may result because the motor overheats but the AC drive does not report the alarm.

Function Code	Parameter Name	Setting Range	Default
H11.02	Motor overload warning coefficient	50%–100%	80%

This function is used to give a warning signal to the control system via DO before motor overload protection. This parameter is used to determine the percentage, at which prewarning is performed before motor overload. The larger the value is, the less advanced the pre-warning will be.

When the accumulative output current of the AC drive is greater than the value of the overload inverse time-lag curve multiplied by H11.02, the DO terminal on the AC drive allocated with function 6 (Motor overload pre-warning) becomes ON.

Function Code	Parameter Name	Setting Range	Default
H11.03	Overvoltage stall protective voltage	120%–150%	130%
H11.04	Overvoltage stall gain	0 (no stall overvoltage)À100	0

When the DC bus voltage exceeds the value of H11.03 (Overvoltage stall protective voltage) during deceleration of the AC drive, the AC drive stops deceleration and keeps the present running frequency. After the bus voltage declines, the AC drive continues to decelerate.

H11.04 (Overvoltage stall gain) is used to adjust the overvoltage suppression capacity of the AC drive. The larger the value is, the greater the overvoltage suppression capacity will be.

In the prerequisite of no overvoltage occurrence, set H11.04 to a small value.

For small-inertia load, the value should be small. Otherwise, the system dynamic response will be slow. For large-inertia load, the value should be large. Otherwise, the suppression result will be poor and an overvoltage fault may occur.

If the overvoltage stall gain is set to 0, the overvoltage stall function is disabled. The overvoltage stall protective voltage setting 100% corresponds to the base values in the following table:

Table 6-7 Overvoltage stall protective voltage setting 100% corresponds to base values

Voltage Class	Corresponding Base Value
Single- phase 220V	290 V
Three- phase 220V	290 V
Three- phase 380V	530 V
Three-phase 480V	620 V
Three- phase 690V	880 V

Function Code	Parameter Name	Setting Range	Default
H11.05	Overcurrent stall gain	0–100	20
H11.06	Overcurrent stall protective current	100% – 200%	150%

When the output current exceeds the overcurrent stall protective current during acceleration/ deceleration of the AC drive, the AC drive stops acceleration/deceleration and keeps the present running frequency. After the output current declines, the AC drive continues to accelerate/decelerate.

H11.05 (Overcurrent stall gain) is used to adjust the overcurrent suppression capacity of the AC drive. The larger the value is, the greater the overcurrent suppression capacity will be. In the prerequisite of no overcurrent occurrence, set H11.05 to a small value.

For small-inertia load, the value should be small. Otherwise, the system dynamic response will be slow. For large-inertia load, the value should be large. Otherwise, the suppression result will be poor and overcurrent fault may occur.

If the overcurrent stall gain is set to 0, the overcurrent stall function is disabled.

Figure 6-25 Diagram of the overcurrent stall protection function

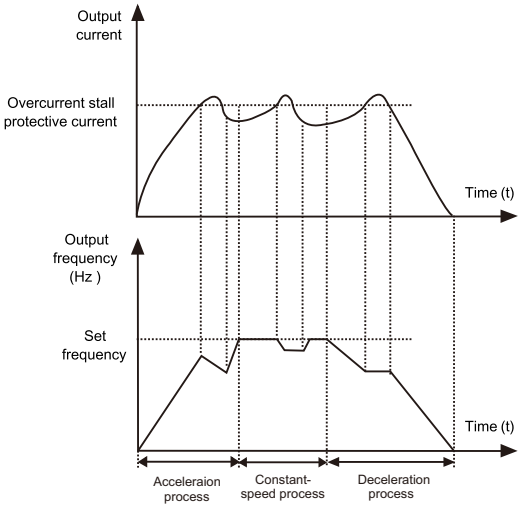
Output current
Overcurrent stall protective current
Time (t)
Output frequency (Hz)
Set frequency
Time (t)
Acceleraion process
Constant-speed process
Deceleration process

Function Code	Parameter Name	Setting Range	Default
H11.07	Short-circuit to ground upon poweron	0: Disabled 1: Enabled	1

It is used to determine whether to check the motor is short-circuited to ground at power-on of the AC drive. If this function is enabled, the AC drive's UVW will have voltage output a while after power-on.

Function Code	Parameter Name	Setting Range	Default
H11.09	Input phase loss protection/contactor energizing protection selection	Unit's digit: Input phase loss protection Ten's digit: Contactor energizing protection 0: Disabled 1: Enabled	11

It is used to determine whether to perform input phase loss or contactor energizing protection.

The HS930 models that provide this function are listed in the following table.

Table 6-8 HS930 models providing the input phase loss or contactor energizing protection function

Voltage Class	Models
Single-phase 220 V	None
Three-phase 220 V	11 kW G model
Three-phase 380 V	18.5 kW G model
Three-phase 690 V	18.5 kW G model

For every voltage class, the HS930 AC drives of powers equal to or greater than those listed in the preceding table provide the function of input phase loss or contactor energizing protection. The HS930 AC drives below the power listed in the table do not have the function no matter whether H11.09 is set to 0 or 1.

Function Code	Parameter Name	Setting Range	Default
H11.10	Output phase loss protection selection	0: Disabled 1: Enabled	1

It is used to determine whether to perform output phase loss protection.

Function Code	Parameter Name	Setting Range	Default
H11.11	Fault auto reset times	0–20	0

It is used to set the times of fault auto resets if this function is used. After the value is exceeded, the AC drive will remain in the fault state.

Function Code	Parameter Name	Setting Range	Default
H11.12	DO action during fault auto reset	0: Not act 1: Act	0

It is used to decide whether the DO acts during the fault auto reset if the fault auto reset function is selected.

Function Code	Parameter Name	Setting Range	Default
H11.13	Time interval of fault auto reset	0.1s–100.0s	1.0s

It is used to set the waiting time from the alarm of the AC drive to fault auto reset.

Function Code	Name	Setting Range
H11.14	1st fault type	0–99
H11.15	2nd fault type	
H11.16	3rd (latest) fault type	

It is used to record the types of the most recent three faults of the AC drive. 0 indicates no fault. For possible causes and solution of each fault, refer to Chapter 8.

Function Code	Parameter Name	Description
H11.17	Frequency upon 3rd fault	It displays the frequency when the latest fault occurs.
H11.18	Current upon 3rd fault	It displays the current when the latest fault occurs.
H11.19	Bus voltage upon 3rd fault	It displays the bus voltage when the latest fault occurs.

Function Code	Parameter Name	Description
H11.20	DI status upon 3rd fault	It displays the status of all DI terminals when the latest fault occurs. The sequence is as follows: BIT9 BIT8 BIT7 BIT6 BIT5 BIT4 BIT3 BIT2 BIT1 BIT0 DI0 DI9 DI8 DI7 DI6 DI5 DI4 DI3 DI2 DI1 If a DI is ON, the setting is 1. If the DI is OFF, the setting is 0. The value is the equivalent decimal number converted from the DI status..
H11.21	Output terminal status upon 3rd fault	It displays the status of all output terminals when the latest fault occurs. The sequence is as follows: BIT4 BIT3 BIT2 BIT1 BIT0 Do2 Do1 REL2 REL1 FMP If an output terminal is ON, the setting is 1. If the output terminal is OFF, the setting is 0. The value is the equivalent decimal number converted from the DI statuses.
H11.22	AC drive status upon 3rd fault	Reserved
H11.23	Power-on time upon 3rd fault	It displays the present power-on time when the latest fault occurs.
H11.24	Running time upon 3rd fault	It displays the present running time when the latest fault occurs.
H11.27	Frequency upon 2nd fault	Same as H11.17−H11.24.
H11.28	Current upon 2nd fault	
H11.29	Bus voltage upon 2nd fault	
H11.30	DI status upon 2nd fault	
H11.31	Output terminal status upon 2nd fault	
H11-32	Frequency upon 2nd fault	
H11-33	Current upon 2nd fault	
H11-34	Bus voltage upon 2nd fault	
H11.37	Frequency upon 1st fault	Same as H11.17−H11.24.
H11.38	Current upon 1st fault	
H11.39	Bus voltage upon 3rd fault	
H11.40	DI status upon 1st fault	
H11.41	Output terminal status upon 1st fault	
H11-42	DI status upon 1st fault	

Function Code	Parameter Name	Setting Range	Default
H11-43	Output terminal status upon 1st fault		
H11-44	Frequency upon 1st fault		
H11.47	Fault protection action selection 1	Unit's digit (Motor overload, E011)	00000
		0: Coast to stop 1: Stop according to the stop mode 2: Continue to run	
		Ten's digit (Power input phase loss, E013)	
		Same as unit's digit	
		Hundred's digit (Power output phase loss, E014)	
		Same as unit's digit	
		Thousand's digit (External equipment fault, E017)	
		Same as unit's digit	
		Ten thousand's digit (Communication fault, E016)	
		Same as unit's digit	
H11.48	Fault protection action selection 2	Unit's digit (Encoder fault, E020)	00000
		0: Coast to stop 1: Switch over to V/F control, stop according to the stop mode 2: Switch over to V/F control, continue to run	
		Ten's digit (EEPROM read-write fault, E021)	
		0: Coast to stop 1: Stop according to the stop mode	
		Hundred's digit: reserved	
		Thousand's digit (Motor overheat, E025)	
		Same as unit's digit in H11.47	
		Ten thousand's digit (Accumulative running time reached)	
		Same as unit's digit in H11.47	

Function Code	Parameter Name	Setting Range	Default
H11.49	Fault protection action selection 3	Unit's digit (User-defined fault 1, E027)	00000
		Same as unit's digit in H11.47	
		Ten's digit (User-defined fault 2, E028)	
		Same as unit's digit in H11.47	
		Hundred's digit (Accumulative power-on time reached, E029)	
		Same as unit's digit in H11.47	
		Thousand's digit (Load becoming 0, E030)	
		0: Coast to stop 1: Stop according to the stop mode 2: Continue to run at 7% of rated motor frequency and resume to the set frequency if the load recovers	
		Ten thousand's digit (PID feedback lost during running, E031)	
		Same as unit's digit in H11.47	
H11.50	Fault protection action selection 4	Unit's digit (Too large speed deviation, E042)	00000
		Same as unit's digit in H11.47	
		Ten's digit (Motor over-speed, E043)	
		Same as unit's digit in H11.47	
		Hundred's digit (Initial position fault, E051)	
		Same as unit's digit in H11.47	
		Thousand's digit (Speed feedback fault, E052)	
		Same as unit's digit in H11.47	
		Ten thousand's digit: Reserved	

If "Coast to stop" is selected, the AC drive displays E0** and directly stops.

If "Stop according to the stop mode" is selected, the AC drive displays A** and stops according to the stop mode. After stop, the AC drive displays E0**.

If "Continue to run" is selected, the AC drive continues to run and displays A**. The running frequency is set in H11.54.

Function Code	Parameter Name	Setting Range	Default
H11.54	Frequency selection for continuing to run upon fault	0: Current running frequency 1: Set frequency 2: Frequency upper limit 3: Frequency lower limit 4: Backup frequency upon abnormality	0
H11.55	Backup frequency upon abnormality	0.0%–100.0% (maximum frequency)	100.0%

If a fault occurs during the running of the AC drive and the handling of fault is set to "Continue to run", the AC drive displays A** and continues to run at the frequency set in H11- 54.
The setting of H11.55 is a percentage relative to the maximum frequency.

Function Code	Parameter Name	Setting Range	Default
H11.56	Type of motor temperature sensor	0: No temperature sensor 1: PT100 2: PT1000	0
H11.57	Motor overheat protection threshold	0–200℃	110℃
H11.58	Motor overheat warning threshold	0–200℃	90℃

The signal of the motor temperature sensor needs to be connected to the optional I/O extension card. AI3 on the extension card can be used for the temperature signal input. The motor temperature sensor is connected to AI3 and PGND of the extension card. The AI3 terminal of the HS930 supports both PT100 and PT1000. Set the sensor type correctly during the use. You can view the motor temperature via H67.34.

If the motor temperature exceeds the value set in H11.57, the AC drive reports an alarm and acts according to the selected fault protection action.
If the motor temperature exceeds the value set in H11.58, the DO terminal on the AC drive allocated with function 39 (Motor overheat warning) becomes ON.

Function Code	Parameter Name	Setting Range	Default
H11.59	Action selection at instantaneous power failure	0: Invalid 1: Decelerate 2: Decelerate to stop	0
H11.60	Action pause judging voltage at instantaneous power failure	80.0%–100.0%	90.0%
H11.61	Voltage rally judging time at instantaneous power failure	0.00–100.00s	0.50s
H11.62	Action judging voltage at instantaneous power failure	60.0%–100.0% (standard bus voltage)	80.0%

Upon instantaneous power failure or sudden voltage dip, the DC bus voltage of the AC drive reduces. This function enables the AC drive to compensate the DC bus voltage reduction with the load feedback energy by reducing the output frequency so as to keep the AC drive running continuously.

If H11.59 = 1, upon instantaneous power failure or sudden voltage dip, the AC drive decelerates. Once the bus voltage resumes to normal, the AC drive accelerates to the set frequency. If the bus voltage remains normal for the time exceeding the value set in H11.61, it is considered that the bus voltage resumes to normal.

If H11.59 = 2, upon instantaneous power failure or sudden voltage dip, the AC drive decelerates to stop.

Figure 6-26 AC drive action diagram upon instantaneous power failure

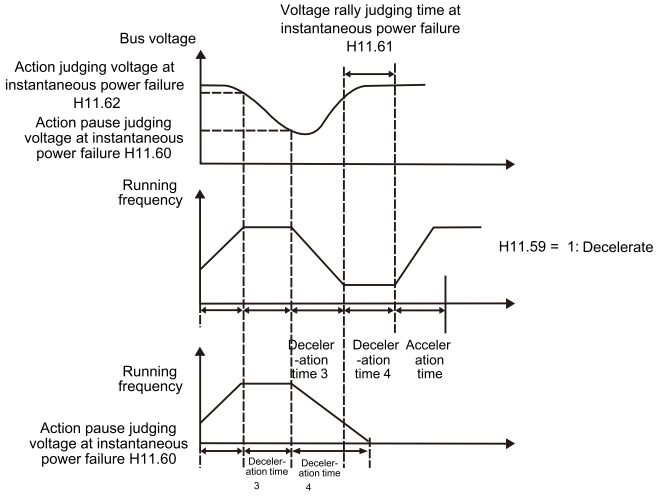

Function Code	Parameter Name	Setting Range	Default
H11.63	Protection upon load becoming 0	0: Disabled 1: Enabled	0
H11.64	Detection level of load becoming 0	0.0%–100.0% (rated motor current)	10.0%
H11.65	Detection time of load becoming 0	0.0–60.0s	1.0s

If protection upon load becoming 0 is enabled, when the output current of the AC drive is lower than the detection level (H11.64) and the lasting time exceeds the detection time (HS930), the output frequency of the AC drive automatically declines to 7% of the rated frequency. During the protection, the AC drive automatically accelerates to the set frequency if the load resumes to normal.

Function Code	Parameter Name	Setting Range	Default
H11.67	Over-speed detection value	0.0%–50.0% (maximum frequency)	20.0%
H11.68	Over-speed detection time	0.0–60.0s	1.0s

This function is valid only when the AC drive runs in the CLVC mode.

If the actual motor rotational speed detected by the AC drive exceeds the maximum frequency and the excessive value is greater than the value of H11.67 and the lasting time exceeds the value of H11.68, the AC drive reports E043 and acts according to the selected fault protection action.

If the over-speed detection time is 0.0s, the over-speed detection function is disabled.

Function Code	Parameter Name	Setting Range	Default
H11.69	Detection value of too large speed deviation	0.0%–50.0% (maximum frequency)	20.0%
H11.70	Detection time of too large speed deviation	0.0–60.0s	5.0s

This function is valid only when the AC drive runs in the CLVC mode.

If the AC drive detects the deviation between the actual motor rotational speed detected by the AC drive and the set frequency is greater than the value of H11.69 and the lasting time exceeds the value of H11.70, the AC drive reports E042 and according to the selected fault protection action.

If H11.70 (Detection time of too large speed deviation) is 0.0s, this function is disabled.

7

Selection and Dimensions

Chapter 7 Selection and Dimensions

7.1 Electrical Specifications of the HS930

Table 7-1 Models and technical data of the HS930

Model	Power Capacity (kVA)	Input Current (A)	Output Current (A)	Adaptable Motor (kW, HP)		Thermal Power Consumption (kW)
Single-phase 220 V, 50/60 Hz						
HS930S0.4GB	1	5.4	2.3	0.4	0.5	0.016
HS930S0.7GB	1.5	8.2	4	0.75	1	0.030
HS930S1.5GB	3	14	7	1.5	2	0.055
HS930S2.2GB	4	23	9.6	2.2	3	0.072
Three-phase 220 V, 50/60 Hz						
HS930-2T0.4GB	1.5	3.4	2.1	0.4	0.5	0.016
HS930-2T0.75GB	3	5	3.8	0.75	1	0.030
HS930-2T1.5GB	4	5.8	5.1	1.5	2	0.055
HS930-2T2.2GB	5.9	10.5	9	2.2	3	0.072
HS930-2T3.7GB	8.9	14.6	13	3.7	5	0.132
HS930-2T5.5GB	17	26	25	5.5	7.5	0.214
HS930-2T7.5GB	21	35	32	7.5	10	0.288
HS930-2T11G	30	46.5	45	11	15	0.489

Model	Power Capacity (kVA)	Input Current (A)	Output Current (A)	Adaptable Motor (kW, HP)		Thermal Power Consumption (kW)
HS930-2T15G	40	62	60	15	20	0.608
HS930-2T18.5G	57	76	75	18.5	25	0.716
HS930-2T22G	69	92	91	22	30	0.887
HS930-2T30G	85	113	112	30	40	1.11
HS930-2T37G	114	157	150	37	50	1.32
HS930-2T45G	134	180	176	45	60	1.66
HS930-2T55G	160	214	210	55	75	1.98
HS930-2T75G	231	307	304	75	100	2.02
Three-phase 380 V, 50/60 Hz						
HS930T0.7GB	1.5	3.4	2.1	0.75	1	0.027
HS930T1.5GB	3	5	3.8	1.5	2	0.050
HS930T2.2GB	4	5.8	5.1	2.2	3	0.066
HS930T3.7GB	5.9	10.5	9	3.7	5	0.120
HS930T5.5GB	8.9	14.6	13	5.5	7.5	0.195
HS930T7.5GB	11	20.5	17	7.5	10	0.262

Model	Power Capacity (kVA)	Input Current (A)	Output Current (A)	Adaptable Motor (kW, HP)		Thermal Power Consumption (kW)
HS930T11GB	17	26	25	11	15	0.445
HS930T15GB	21	35	32	15	20	0.553
HS930T18.5G	24	38.5	37	18.5	25	0.651
HS930T22G	30	46.5	45	22	30	0.807
HS930T30G	40	62	60	30	40	1.01
HS930T37G	57	76	75	37	50	1.20
HS930T45G	69	92	91	45	60	1.51
HS930T55G	85	113	112	55	75	1.80
HS930T75G	114	157	150	75	100	1.84
HS930T90G	134	180	176	90	125	2.08
HS930T110G	160	214	210	110	150	2.55
HS930T132G	192	256	253	132	200	3.06
HS930T160G	231	307	304	160	250	3.61
HS930T200G	250	385	377	200	300	4.42
HS930T220G	280	430	426	220	300	4.87
HS930T250G	355	468	465	250	400	5.51
HS930T280G	396	525	520	280	370	6.21
HS930T315G	445	590	585	315	500	7.03
HS930T355G	500	665	650	355	420	7.81
HS930T400G	565	785	725	400	530	8.51

7.2 Physical Appearance and Overall Dimensions of the HS930

Figure 7.1 Physical appearance and overall dimensions of the HS930 (plastic housing)

Figure 7-2 Physical appearance and overall dimensions of the HS930(sheet metal

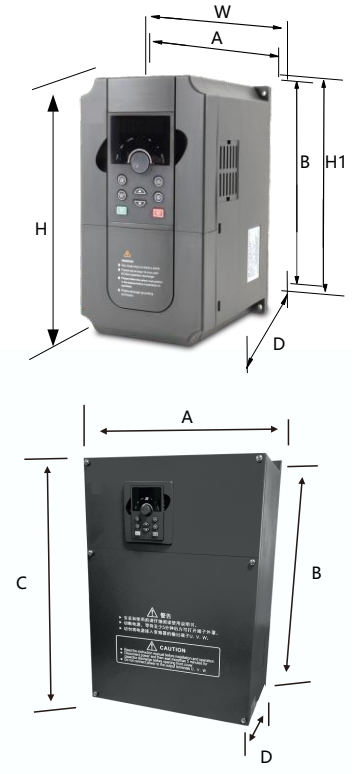

housing)

Table 7-2 Overall dimensions and mounting hole dimensions of the HS930

Model	Mounting Hole (mm)		Overall Dimensions (mm)				Mounting Hole Diameter (mm)	Weight (kg)
	A	B	H	H1	W	D		
Single-phase 220 V								
HS930T0.7GB	109	186	196	/	117	157	Ø4.0	/
HS930T1.5GB								
HS930T2.2GB								

Model	Mounting Hole (mm)		Overall Dimensions (mm)				Mounting Hole Diameter (mm)	Weight (kg)
	A	B	H	H1	W	D		
HS930T3.7GB HS930T5.5PB	128	243	257	/	140	178	Ø5.0	/
HS930T5.5GB HS930T7.5PB								
HS930T7.5GB HS930T11PB	128	243	257	/	140	178	Ø5.0	/
HS930T11GB HS930T15PB	160	312	325	/	174	201	Ø5	/
HS930T15GB HS930T18.5PB								
HS930ST18.5GB	190	362	375	/	204	201	Ø5.5	/
HS930ST22PB								
HS930ST22GB								
HS930T18.5GB HS930T22PB	170	389	/	410	221	183	Ø6	/
HS930T22GB HS930T30PB								
HS930T30GB	230	436	/	453	274	225	Ø7	/
HS930T37PB								
HS930MT37GB								
HS930T37G HS930T45P	200	550	/	570	326	263	Ø9	/
HS930T45G HS930T55P								
HS930T55G								
HS930T75P	260	580	/	600	386	263	Ø9	/
HS930T75G								
HS930T90P								
HS930T90G HS930T110P	260	630	/	650	386	293	Ø9	/
HS930T110G HS930T132P								
HS930T132G HS930T160P	135+135+135	838	/	869	479	348	Ø10	/
HS930T160G	135+135+135	1018	/	1049	479	348	Ø10	/

Model	Mounting Hole (mm)		Overall Dimensions (mm)				Mounting Hole Diameter (mm)	Weight (kg)
	A	B	H	H1	W	D		
HS930T200P	210+210	1075	/	1100	650	380	Ø12	/
HS930T200G HS930T220P								
HS930T220G HS930T250P								
HS930T250G HS930T280P								
HS930T280G HS930T315P								
HS930T315G HS930T355P								
HS930T355G HS930T400P	320+320	1075	/	1100	870	380	Ø12	/
HS930T400G HS930T450P								

7.3 Selection of Peripheral Electrical Devices

Table 7.14 Selection of peripheral electrical devices of the HS930

AC Drive Model	MCCB (A)	Contactor (A)	Cable of Input Side Main Circuit (mm^2)	Cable of Output Side Main Circuit (mm^2)	Cable of Control Circuit (mm^2)
Single-phase 220 V					
930 S0.4GB	6	9	0.75	0.75	0.5
930 S0.7GB	10	12	0.75	0.75	0.5
930 S1.5GB	16	18	1.5	1.5	0.5
930 S2.2GB	25	25	2.5	2.5	0.5
Three-phase 220 V					
930-2T0.4GB	4	9	0.75	0.75	0.5
930-2T0.75GB	6	9	0.75	0.75	0.5
930-2T1.5GB	10	12	0.75	0.75	0.5
930-2T2.2GB	16	18	1.5	1.5	0.5
930-2T3.7GB	20	25	2.5	2.5	0.75
930-2T5.5GB	32	32	4.0	4.0	0.75
930-2T7.5GB	40	40	6.0	6.0	0.75
930-2T11G	50	50	10	10	0.75
930-2T15G	63	63	16	16	0.75
930-2T18.5G	80	80	25	25	1.0
930-2T22G	100	115	35	35	1.0
930-2T30G	125	125	50	50	1.0
930-2T37G	160	185	70	70	1.0
930-2T45G	200	225	95	95	1.0
930-2T55G	225	225	120	120	10
930-2T75G	350	400	150	150	1.0
Three-phase 380 V					
930T0.7GB	4	9	0.75	0.75	0.5
930T1.5GB	6	9	0.75	0.75	0.5
930T2.2GB	10	12	0.75	0.75	0.5
930T3.7GB	16	18	1.5	1.5	0.5
930T5.5 GB	20	25	2.5	2.5	0.75

AC Drive Model	MCCB (A)	Contactor (A)	Cable of Input Side Main Circuit (mm^2)	Cable of Output Side Main Circuit (mm^2)	Cable of Control Circuit (mm^2)
930T7.5 GB	25	25	4.0	4.0	0.75
930T11 GB	32	32	6.0	6.0	0.75
930T15GB	40	40	6.0	6.0	0.75
930T18.5G	50	50	10	10	1.0
930T22G	50	50	10	10	1.0
930T30G	63	63	16	16	1.0
930T37G	80	80	25	25	1.0
930T45G	100	115	35	35	1.0
930T55G	125	125	50	50	1.0
930T75G	160	185	70	70	1.0
930T90G	200	225	95	95	1.0
930T110G	225	225	120	120	1.0
930T132G	315	330	120	120	1.0
930T160G	350	400	150	150	1.0
930T200G	400	400	185	185	1.0
930T220G	500	500	240	240	1.0
930T250G	500	500	120 x 2	120 x 2	1.0
930T280G	630	630	120 x 2	120 x 2	1.0
930T315G	630	630	150 x 2	150 x 2	1.0
930T355G	700	800	185 x 2	185 x 2	1.0
930T400G	800	800	240 x 2	240 x 2	1.0

7.4 Selection and Installation of External DC Reactor

7.4.1 Installation Mode of External DC Reactor

The HS930 series AC drives of over 75 kW power (2T is 37 kW) are configured with an external DC reactor as standard. The DC reactor is packed in separate wooden box for delivery.

When installing the DC reactor, remove the shorting copper busbar between the main circuit connection terminals P and P+, Then connect the DC reactor between terminals P+ and + (no polarity requirement). The copper busbar is not used any longer after the installation is complete.

.

Note

Customized models can be provided for special requirements.

7.4.2 Physical Dimensions of External DC Reactor

Figure 7-15 Physical dimensions of external DC reactor

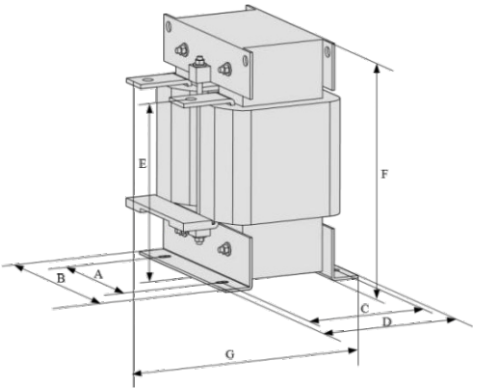

Table 7-15 Adaptable AC drive models

Adaptable AC Drive Model	A	B	C	D	E	F	G	Fixed Hole	Diameter of the Hole for Connecting Copper Busbar	Reactor Model
-2T37G/45G	160	190	125	161	192	255	195	10 x 15	Φ12	DCL-0200
HS930T75G/90G										
HS930-5T75G/90G										
HS930-2T55G	160	190	125	161	192	255	195	10 x 15	Φ12	DCL-0250
HS930T/110G/132P										
HS930-5T/110G/132P										
HS930-2T75G	160	190	125	161	192	255	195	10 x 15	Φ12	DCL-0360
HS930T132G/160G										
HS930-5T132G/160G										
HS930T200G/220G	190	230	93	128	250	325	200	13 x 18	Φ15	DCL-0600
HS930-5T/200G/220G										
HS930T250G/280G	190	230	93	128	250	325	200	13 x 18	Φ15	DCL-0700
HS930-5T250G/280G										
HS930T315G/355G/400G	224	250	135	165	260	330	235	12 x 20	Φ14	DCL-1000
HS930-5T315G/355G/400G										
HS930-7T55G/75G/90G	160	190	125	161	192	255	195	10 x 15	Φ12	Not configured with reactor now
HS930-7T110G/132G										
HS930-7T160GH/200GH	160	190	125	161	192	255	195	10 x 15	Φ12	DCL-0250
HS930-7T220GH/250GH	160	190	125	161	192	255	195	10 x 15	Φ12	DCL-0360
HS930-7T280G/315G/355G										
HS930-7T400G/450G/500G	190	230	93	128	250	325	200	13 x 18	Φ15	DCL-0700

7.5 Physical Dimensions of External Operation Panel

Figure 7-16 Physical dimensions of external operation panel

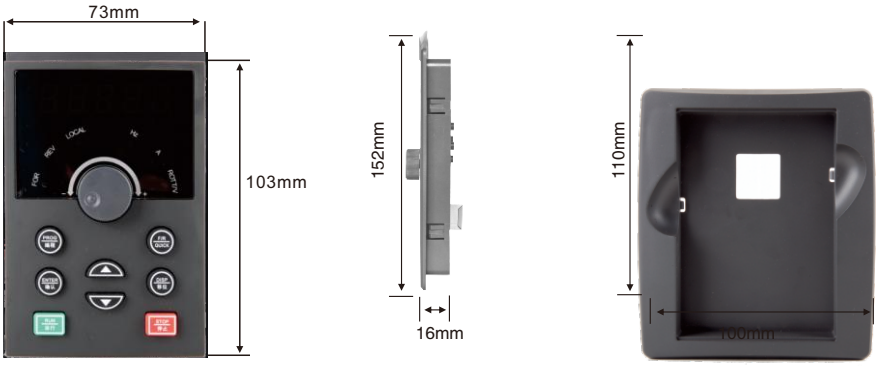

mounting dimensions of External Operation Panel

thickness of External Operation Panel

hole size of External Operation Panel

7.6 Selection of Braking Unit and Braking Resistor

7.6.1 Physical Dimensions of External DC Reactor

The motor and load's regenerative energy is almost completely consumed on the braking resistor when braking.

According to the formula U x U/R = Pb:

- U refers to the braking voltage at system stable braking.

  Different systems select different braking voltages. The 380 VAC system usually selects 700 V braking voltage.

- Pb refers to the braking power.

7.6.2 Selection of Power of Braking Resistor

In theory, the power of the braking resistor is consistent with the braking power. But in consideration that the de-rating is 70%, you can calculate the power of the braking resistor according to the formula 0.7 x Pr = Pb x D.

- Pr refers to the power of resistor.
- D refers to the braking frequency (percentage of the regenerative process to the whole working process)

Application	Elevator	Winding and unwinding	Centrifuge	Occasional braking load	General application

Braking Frequency	20%–30%	20%–30%	50%–60%	5%	10%

Table 7-14 below provides data for reference. You can select different resistance and power based on actual needs. However, the resistance must not be lower than the recommended value. The power may be higher than the recommended value.

The braking resistor model is dependent on the generation power of the motor in the actual system and is also related to the system inertia, deceleration time and potential energy load. For systems with high inertia, and/or rapid deceleration times, or frequent braking sequences, the braking resistor with higher power and lower resistance value should be selected.

Table 7-16 Recommended values of braking resistor

Model	Recommended Power	Recommended Resistance	Braking Unit	Remark
Single-phase 220 V				
930S0.4GB	80 W	≥ 200 Ω	Built-in (standard)	No special description
930S0.7GB	80 W	≥ 150 Ω		
930S1.5GB	100 W	≥ 100 Ω		
930S2.2GB	100 W	≥ 70 Ω		
Three-phase 220 V				
930-2T0.4GB	150 W	≥150 Ω	Built-in (standard)	No special description
930-2T0.75GB	150 W	≥110 Ω		
930-2T1.1GB	250 W	≥100 Ω		
930-2T2.2GB	300 W	≥65 Ω		
930-2T3.7GB	400 W	≥45 Ω		
930-2T5.5GB	800 W	≥22 Ω		
930-2T7.5GB	1000 W	≥16 Ω		
		≥11 Ω		
930-2T11G	1500 W	≥8 Ω	Built-in (optional)	Add "B" to the model if a braking unit is needed.
930-2T15G	2500 W			
930-2T18.5G	3.7 kW	≥8.0 Ω	External	JLBUN-45-S
930-2T22G	4.5 kW	≥8 Ω	External	JLBUN-45-S
930-2T30G	5.5 kW	≥4 Ω	External	JLBUN-60-S
930-2T37G	7.5 kW	≥4 Ω	External	JLBUN-90-S
930-2T45G	4.5 kW x 2	≥4 Ω x 2	External	JLBUN-60-S x 2
930-2T55G	5.5 kW x 2	≥4 Ω x 2	External	JLBUN-60-S x 2
930-2T75G	16 kW	≥ 1.2 Ω	External	JLBUN-90-S x 2
Three-phase 380 V				
930T0.7GB	150 W	≥ 300 Ω	Built-in	No special description

Model	Recommended Power	Recommended Resistance	Braking Unit	Remark
930T1.5GB	150 W	≥220Ω	(standard)	
930T2.2GB	250 W	≥200Ω		
930T3.7GB	300 W	≥130Ω		
930T5.5GB	400 W	≥ 90 Ω		
930T7.5GB	500 W	≥ 65 Ω		
930T11GB	800 W	≥ 43 Ω		
930T15GB	1000 W	≥ 32 Ω		
930T18.5G	1300 W	≥ 25 Ω	Built-in (optional)	Add "B" to the model if a braking unit is needed.
930T22G	1500 W	≥ 22 Ω		
930T30G	2500 W	≥ 16 Ω		
930T37G	3.7 kW	≥ 16.0 Ω	External	JLBUN-45-T
930T45G	4.5 kW	≥16 Ω	External	JLBUN-60-T
930T55G	5.5 kW	≥ 8 Ω	External	JLBUN-60-T
930T75G	7.5 kW	≥ 8 Ω	External	JLBUN-90-T
930T90G	4.5 kW x 2	≥ 8 Ω x 2	External	JLBUN-60-T x 2
930T110G	5.5 kW x 2	≥ 8 Ω x 2	External	JLBUN-60-T x 2
930T132G	6.5 kW x 2	≥ 8 Ω x 2	External	JLBUN-90-T x 2
930T160G	16 kW	≥ 2.5 Ω	External	JLBUN-90-T x 2
930T200G	20 kW	≥ 2.5 Ω	External	JLBU-200-B
930T220G	22 kW	≥ 2.5 Ω	External	JLBU-200-B
930T250G	12.5 kW x 2	≥ 2.5 Ω x 2	External	JLBU-200-B x 2
930T280G	14 kW x 2	≥ 2.5 Ω x 2	External	JLBU-200-B x 2
930T315G	16 kW x 2	≥ 2.5 Ω x 2	External	JLBU-200-B x 2
930T355G	17 kW x 2	≥ 2.5 Ω x 2	External	JLBU-200-B x 2
930T400G	14 kW x 3	≥ 2.5 Ω x 3	External	JLBU-200-B x 3

Note

- " x 2" indicates that two braking units with their respective braking resistor are connected in parallel.
- " x 3" means the same.

8

Maintenance and Troubleshooting

Chapter 8 Maintenance and Troubleshooting

8.1 Routine Repair and Maintenance of the HS930

8.1.1 Routine Maintenance

The influence of the ambient temperature, humidity, dust and vibration will cause the aging of the devices in the AC drive, which may cause potential faults or reduce the service life of the AC drive. Therefore, it is necessary to carry out routine and periodic maintenance.

Routine maintenance involves checking:

Maintenance and Troubleshooting HS930 User

- Whether the motor sounds abnormally during running
- Whether the motor vibrates excessively during running
- Whether the installation environment of the AC drive changes.
- Whether the AC drive's cooling fan works normally
- Whether the AC drive overheats

Routine cleaning involves:

- Keep the AC drive clean all the time.
- Remove the dust, especially metal powder on the surface of the AC drive, to prevent the dust from entering the AC drive.
- Clear the oil stain on the cooling fan of the AC drive.

8.1.2 Periodic Inspection

Perform periodic inspection in places where inspection is difficult.

Periodic inspection involves:

Check and clean the air duct periodically.

Check whether the screws become loose.

Check whether the AC drive is corroded.

Check whether the wiring terminals show signs of arcing;

Main circuit insulation test

Prompt

Before measuring the insulating resistance with megameter (500 VDC megameter recommended), disconnect the main circuit from the AC drive. Do not use the insulating resistance meter to test the insulation of the control circuit. The high voltage test need not be performed again because it has been completed before delivery.

8.1.3 Replacement of Vulnerable Components

The vulnerable components of the AC drive are cooling fan and filter electrolytic capacitor. Their service life is related to the operating environment and maintenance status. Generally, the service life is shown as follows:

Component	Service Life	Possible Damage Reason	Judging Criteria
Fan	2 to 3 years	• Bearing worn • Blade aging	• Whether there is crack on the blade • Whether there is abnormal vibration noise upon startup
Electrolytic capacitor	4 to 5 years	• Input power supply in poor quality • High ambient temperature • Frequent load jumping • Electrolytic aging	• Whether there is liquid leakage. • Whether the safe valve has projected. • Measure the static capacitance. • Measure the insulating resistance.

8.1.4 Storage of the AC Drive

For storage of the AC drive, pay attention to the following two aspects:

1) Pack the AC drive with the original packing box provided by Inovance.

2) Long-term storage degrades the electrolytic capacitor. Thus, the AC drive must be energized once every 2 years, each time lasting at least 5 hours. The input voltage must be increased slowly to the rated value with the regulator.

8.2 Warranty Agreement

1) Free warranty only applies to the AC drive itself.

2) We will provide 18-month warranty (starting from the leave-factory date as indicated on the barcode) for the failure or damage under normal use conditions. If the equipment has been used for over 18 months, reasonable repair expenses will be charged.

3) Reasonable repair expenses will be charged for the damages due to the following causes:

   - Improper operation without following the instructions
   - Fire, flood or abnormal voltage.
   - Using the AC drive for non-recommended function

4) The maintenance fee is charged according to HARS 's uniform standard. If there is an agreement, the agreement prevails.

8.3 Faults and Solutions

The HS930 provides a total of 24 pieces of fault information and protective functions. After a fault occurs, the AC drive implements the protection function, and displays the fault code on the operation panel (if the operation panel is available).

Before contacting Jvlianfor technical support, you can first determine the fault type, analyze the causes, and perform troubleshooting according to the following tables. If the fault cannot be rectified, contact the agent or Inovance.

E022 is the AC drive hardware overcurrent or overvoltage signal. In most situations, hardware overvoltage fault causes E022.

Figure 8-1 Solutions to the faults of the HS930

Fault Name	Display	Possible Causes	Solutions
Inverter unit protection	E001	1: The output circuit is grounded or short circuited. 2: The connecting cable of the motor is too long. 3: The module overheats. 4: The internal connections become loose. 5:The main control board is faulty. 6: The drive board is faulty. 7: The inverter module is faulty.	1: Eliminate external faults. 2: Install a reactor or an output filter. 3: Check the air filter and the cooling fan. 4: Connect all cables properly.
Overcurrent during acceleration	E004	1: The output circuit is grounded or short circuited. 2: Motor auto-tuning is not performed. 3: The acceleration time is too short. 4: Manual torque boost or V/F curve is not appropriate. 5: The voltage is too low. 6: The startup operation is performed on the rotating motor. 7: A sudden load is added during acceleration. 8: The AC drive model is of too small power class.	1: Eliminate external faults. 2: Perform the motor autotuning. 3: Increase the acceleration time. 4: Adjust the manual torque boost or V/F curve. 5: Adjust the voltage to normal range. 6: Select rotational speed tracking restart or start the motor after it stops. 7: Remove the added load. 8: Select an AC drive of higher power class.
Overcurrent during deceleration	E005	1: The output circuit is grounded or short circuited. 2: Motor auto-tuning is not performed. 3: The deceleration time is too short. 4: The voltage is too low. 5: A sudden load is added during deceleration. 6: The braking unit and braking resistor are not installed.	1: Eliminate external faults. 2: Perform the motor autotuning. 3: Increase the deceleration time. 4: Adjust the voltage to normal range. 5: Remove the added load. 6: Install the braking unit and braking resistor.
Overcurrent at constant speed	E006	1: The output circuit is grounded or short circuited. 2: Motor auto-tuning is not performed. 3: The voltage is too low. 4: A sudden load is added during operation. 5: The AC drive model is of too small power class.	1: Eliminate external faults. 2: Perform the motor autotuning. 3: Adjust the voltage to normal range. 4: Remove the added load. 5: Select an AC drive of higher power class.

Fault Name	Displa	Possible Causes	Solutions
Overvoltage during acceleration	E007	1: The input voltage is too high. 2: An external force drives the motor during acceleration. 3: The acceleration time is too short. 4: The braking unit and braking resistor are not installed.	1: Adjust the voltage to normal range. 2: Cancel the external force or install a braking resistor. 3: Increase the acceleration time. 4: Install the braking unit and braking resistor.
Overvoltage during deceleration	E008	1: The input voltage is too high. 2: An external force drives the motor during deceleration. 3: The deceleration time is too short. 4: The braking unit and braking resistor are not installed.	1: Adjust the voltage to normal range. 2: Cancel the external force or install the braking resistor. 3: Increase the deceleration time. 4: Install the braking unit and braking resistor.
Overvoltage at constant speed	E009	1: The input voltage is too high. 2: An external force drives the motor during deceleration.	1: Adjust the voltage to normal range. 2: Cancel the external force or install the braking resistor.
Undervoltage	E010	1: Instantaneous power failure occurs on the input power supply. 2: The AC drive's input voltage is not within the allowable range. 3: The bus voltage is abnormal. 4: The rectifier bridge and buffer resistor are faulty. 5: The drive board is faulty. 6: The main control board is faulty.	1: Reset the fault. 2: Adjust the voltage to normal range.
Power input phase loss	E013	1: The three-phase power input is abnormal. 2: The drive board is faulty. 3: The lightening board is faulty. 4: The main control board is faulty.	1: Eliminate external faults.
Power output phase loss	E014	1: The cable connecting the AC drive and the motor is faulty. 2: The AC drive's three-phase outputs are unbalanced when the motor is running. 3: The drive board is faulty. 4: The module is faulty.	1: Eliminate external faults. 2: Check whether the motor three-phase winding is normal.

Fault Name	Display	Possible Causes	Solutions
Module overheat	E015	1: The ambient temperature is too high. 2: The air filter is blocked. 3: The fan is damaged. 4: The thermally sensitive resistor of the module is damaged. 5: The inverter module is damaged.	1: Lower the ambient temperature. 2: Clean the air filter. 3: Replace the damaged fan. 4: Replace the damaged thermally sensitive resistor. 5: Replace the inverter module.
Communication fault	E016	1: The host computer is in abnormal state. 2: The communication cable is faulty. 3: H16.01 is set improperly. 4: The communication parameters in group H12 are set improperly.	1: Check the cabling of host computer. 2: Check the communication cabling. 3: Set H16.01 correctly. 4: Set the communication parameters properly.
External equipment fault	E017	1: External fault signal is input via DI. 2: External fault signal is input via virtual I/O.	Reset the operation.
Motor auto-tuning fault	E018	1: The motor parameters are not set according to the nameplate. 2: The motor auto-tuning times out.	1: Set the motor parameters according to the nameplate properly. 2: Check the cable connecting the AC drive and the motor.
Current detection fault	E019	1: The HALL device is faulty. 2: The drive board is faulty.	1: Replace the faulty HALL device. 2: Replace the faulty drive board.
Encoder fault	E020	1: The encoder type is incorrect. 2: The cable connection of the encoder is incorrect. 3: The encoder is damaged. 4: The PG card is faulty.	1: Set the encoder type correctly based on the actua situation. 2: Eliminate external faults. 3: Replace the damaged encoder. 4: Replace the faulty PG card.
EEPROM read-write fault	E021	The EEPROM chip is damaged.	Replace the main control board.
AC drive hardware fault	E022	1: Overvoltage exists. 2: Overcurrent exists.	1: Handle based on overvoltage. 2: Handle based on overcurrent.

Fault Name	Display	Possible Causes	Solutions
Short circuit to ground	E023	The motor is short circuited to the ground.	Replace the cable or motor.
Accumulative running time reached	E026	The accumulative running time reaches the setting value.	Clear the record through the parameter initialization function.
User-defined fault1	E027	1: The user-defined fault 1 signal is input via DI. 2: User-defined fault 1 signal is input via virtual I/O.	Reset the operation.
User-defined fault 2	E028	1: The user-defined fault 2 signal is input via DI. 2: The user-defined fault 2 signal is input via virtual I/O.	Reset the operation.
Accumulative power-on time reached	E029	The accumulative power-on time reaches the setting value.	Clear the record through the parameter initialization function.
Load becoming 0	E030	The AC drive running current is lower than H11.64.	Check that the load is disconnected or the setting of H11.64 and H11.65 is correct.
PID feedback lost during running	E031	The PID feedback is lower than the setting of H09.26.	Check the PID feedback signal or set H09.26 to a proper value.
Control power supply fault	E032	The input voltage is not within the allowable range.	Adjust the input voltage to the allowable range.
Contactor fault	E033	1: The drive board and power supply are faulty. 2: The contactor is faulty.	1: Replace the faulty drive board or power supply board. 2: Replace the faulty contactor.
Pulse-by-pulse current limit fault	E040	1: The load is too heavy or lockedrotor occurs on the motor. 2: The AC drive model is of too small power class.	1: Reduce the load and check the motor and mechanical condition. 2: Select an AC drive of higher power class.
Motor switchover fault during running	E041	Change the selection of the motor via terminal during running of the AC drive.	Perform motor switchover after the AC drive stops.
Too large speed deviation	E042	1: The encoder parameters are set incorrectly. 2: The motor auto-tuning is not performed.	1: Set the encoder parameters properly. 2: Perform the motor autotuning. 3: Set H11.69 and H11.70

Fault Name	Display	Possible Causes	Solutions
Motor over-speed	E043	1: The encoder parameters are set incorrectly. 2: The motor auto-tuning is not performed. 3:H11.69 and H11.70 are set incorrectly.	1: Set the encoder parameters properly. 2: Perform the motor autotuning. 3: Set H11.69 and H11.70 correctly based on the actual situation.
Motor overheat	E045	1: The cabling of the temperature sensor becomes loose. 2: The motor temperature is too high.	1: Check the temperature sensor cabling and eliminate the cabling fault. 2: Lower the carrier frequency or adopt other heat radiation measures.
Initial position fault	E051	The motor parameters are not set based on the actual situation.	Check that the motor parameters are set correctly and whether the setting of rated current is too small.

8.4 Common Faults and Solutions

You may come across the following faults during the use of the AC drive. Refer to the following table for simple fault analysis.

Table 8-2 Troubleshooting to common faults of the AC drive

SN	Fault	Possible Causes	Solutions
1	There is no display at power-on.	1: There is no power supply to the AC drive or the power input to the AC drive is too low. 2: The power supply of the switch on the drive board of the AC drive is faulty. 3: The rectifier bridge is damaged. 4: The control board or the operation panel is faulty. 5: The cable connecting the control board and the drive board and the operation panel breaks.	1: Check the power supply. 2: Check the bus voltage. 3: Re-connect the 8-core and 34-core cables.

SN	Fault	Possible Causes	Solutions
2	JL is displayed at power-on.	1: The cable between the drive board and the control board is in poor contact. 2: Related components on the control board are damaged. 3: The motor or the motor cable is short circuited to the ground. 4: The HALL device is faulty. 5: The power input to the AC drive is too low.	1: Re-connect the 8-core and 28-core cables.
3	E023 is displayed at power-on.	1: The motor or the motor output cable is short-circuited to the ground. 2: The AC drive is damaged.	1: Measure the insulation of the motor and the output cable with a megger.
4	The AC drive display is normal upon poweron. But JL is displayed after running and stops immediately.	1:The cooling fan is damaged or locked-rotor occurs. 2: The external control terminal cable is short circuited.	1: Replace the damaged fan. 2: Eliminate external fault.
5	E015 (module overheat) fault is reported frequently.	1: The setting of carrier frequency is too high. 2: The cooling fan is damaged, or the air filter is blocked. 3: Components inside the AC drive are damaged (thermal coupler or others).	1: Reduce the carrier frequency (H00.11). 2: Replace the fan and clean the air filter.
6	The motor does not rotate after the AC drive runs.	1: Check the motor and the motor cables. 2: The AC drive parameters are set improperly (motor parameters). 3: The cable between the drive board and the control board is in poor contact. 4: The drive board is faulty.	1: Ensure the cable between the AC drive and the motor is normal. 2: Replace the motor or clear mechanical faults. 3: Check and re-set motor parameters.

SN	Fault	Possible Causes	Solutions
7	The DI terminals are disabled.	1: The parameters are set incorrectly. 2: The external signal is incorrect. 3: The jumper bar across EV and +24 V becomes loose. 4: The control board is faulty.	1: Check and reset the parameters in group H05. 2: Re-connect the external signal cables. 3: Re-confirm the jumper bar across EV and +24 V.
8	The motor speed is always low in CLVC mode.	1: The encoder is faulty. 2: The encoder cable is connected incorrectly or in poor contact. 3: The PG card is faulty. 4: The drive board is faulty.	1: Replace the encoder and ensure the cabling is proper. 2: Replace the PG card.
9	The AC drive reports overcurrent and overvoltage frequently.	1: The motor parameters are set improperly. 2: The acceleration/deceleration time is improper. 3: The load fluctuates.	1: Re-set motor parameters or re-perform the motor autotuning. 2: Set proper acceleration/ deceleration time.
10	E033 is reported upon power-on or running.	The soft startup contactor is not picked up.	1: Check whether the contactor cable is loose. 2: Check whether the contactor is faulty. 3: Check whether 24 V power supply of the contactor is faulty.
11	8.8.8.8.8 is displayed upon power-on.	Related component on the control board is damaged.	Replace the control board.